CITY OF SACRAMENTO

1231 I Street, Sacramento, CA 95814

Permit No: 0107337
Insp Area: 1
Thos Bros: 297J5

Site Address: 4408 F ST SAC
Parcel No: 004-0301-002

Sub-Type: ASFR
Housing (Y/N): N

CONTRACTOR

OWNER
CHERYL LUTZ
4408 F ST
SACRAMENTO CA 95819

ARCHITECT

Nature of Work: ASFR - 627 SF LVNG(77 1ST, 550 2ND), MINOR 1ST FLOOR REMODEL INCLUDING NEW STAIRS, WINDOW CHANGEOUTS, BRACED WALL PANELS AND LOWER ROOF TIE-IN AND REROOF AS NEEDED.

CONSTRUCTION LENDING AGENCY : I hereby affirm under penalty of perjury that there is a construction lending agency for the performance of the work for which this permit is issued (Sec. 3097, Civ. C).

Lender's Name_____ Lender'sAddress_____

LICENSED CONTRACTORS DECLARATION: I hereby affirm under penalty of perjury that I am licensed under provisions of Chapter 9 (commencing with section 7000) of Division 3 of the Business and Professions Code and my license is in full force and effect.

License Class_____ License Number Date_____ Contractor Signature_____

OWNER-BUILDER DECLARATION: I hereby affirm under penalty of perjury that I am exempt from the contractors License Law for the following reason (Sec. 7031.5, Business and Professions Code; any city or county which requires a permit to construct, alter, improve, demolish, or repair any structure, prior to its issuance, also requires the applicant for such permit to file a signed statement that he or she is licensed pursuant to the provisions of the Contractors License Law (Chapter 9 (commencing with Section 7000) of Division 8 of the Business and Professions Code) or that he or she is exempt therefrom and the basis for the alleged exemption. Any violation of Section 7031.5 by any applicant for a permit subjects the applicant to a civil penalty of not more than five hundred dollars ($500.00);

_____ I, as a owner of the property, or my employees with wages as their sole compensation, will do the work, and the structure is not intended or offered for sale (Sec. 7044, Business and Professional Code: The Contractors License Law does not apply to an owner of property who builds or improves thereon, and who does such work himself or herself or through his/her own employees, provided that such improvements are not intended or offered for sale. If, however, the building or improvement is sold within one year of completion, the owner-builder will have the burden of proving that he/she did not build or improve for the purpose of sale.)

X I, as owner of the property, am exclusively contracting with licensed contractors to construct the project (Sec. 7044, Business and Professions Code: The Contractors License Law does not apply to an owner of property who builds or improves thereon, and who contracts for such projects with a contractor(s) licensed pursuant to the Contractors License Law).

_____ I am exempt under Sec._____ B & PC for this reason:_____

X Date 9/17/01 Owner Signature [signature]

IN ISSUING THIS BUILDING PERMIT, the applicant represents, and the city relies on the representation of the applicant, that the applicant verified all measurements and locations shown on the application or accompanying drawings and that the improvement to be constructed does not violate any law or private agreement relating to permissible or prohibited locations for such improvements. This building permit does not authorize any illegal location of any improvement or the violation of any private agreement relating to location of improvements.

I certify that I have read this application and state that all information is correct. I agree to comply with all city and county ordinances and state laws relating to building construction and herby authorize representative(s) of this city to enter upon the abovementioned property for inspection purposes.

X Date 9/17/01 X Applicant/Agent Signature [signature]

WORKER'S COMPENSATION DECLARATION: I hereby affirm under penalty of perjury one of the following declarations:

_____ I have and will maintain a certificate of consent to self-insure for workers' compensation as provided for by Section 3700 of the Labor Code, for the performance of work for which the permit is issued.

_____ I have and will maintain workers' compensation insurance, as required by Section 3700 of the Labor Code, for the performance of the work for which this permit is issued. My workers' compensation insurance carrier and policy number are:

Carrier Policy Number Exp Date

CX (This section need not be completed if the permit is for $100 or less) I certify that in the performance of the work for which this permit is issued, I shall not employ any person in any manner so as to become subject to the workers' compensation laws of California and agree that if I should become subject to the workers' compensation provisions of Section 3700 of the Labor Code, I shall forthwith comply with those provisions.

X Date 9/17/01 X Applicant Signature [signature]

WARNING: FAILURE TO SECURE WORKER'S COMPENSATION COVERAGE IS UNLAWFUL AND SHALL SUBJECT AN EMPLOYER TO CRIMINAL PENALTIES AND CIVIL FINES UP TO ONE HUNDRED THOUSAND DOLLARS ($100,000) IN ADDITION TO THE COST OF COMPENSATION, DAMAGES AS PROVIDED FOR IN SECTION 3706 OF THE LABOR CODE, INTEREST AND ATTORNEY'S FEE.

THIS PERMIT SHALL EXPIRE BY LIMITATION IF WORK IS NOT COMMENCED WITHIN 180 DAYS.

4-25-02 02-633

1/3

LUTZ HOME ADDITION REVISION to
4408 F STREET
SAC'TO CA 01-07337

- TJI supplied & installed ARF 11 7/8" LPI 225 @ l/360 $40_L + 10_D$ MAX SPAN 20'-7"
- out to out of Bldg = 24'-3"

Clr span = 24.25 - 0.67 = 23.58' or 23'-7"

$\frac{20.57}{X} : \frac{23.58}{360} = 314$ or $l/314$ $\Delta = \frac{23.58 \times 12}{314} = 0.90"$

Allowable is 0.70"

Floor is sheathed w/ 3/4" T&G Floor Plywood - Glued & screwed to TJI's

Clr T-BEAM Action w/ Plywood floor

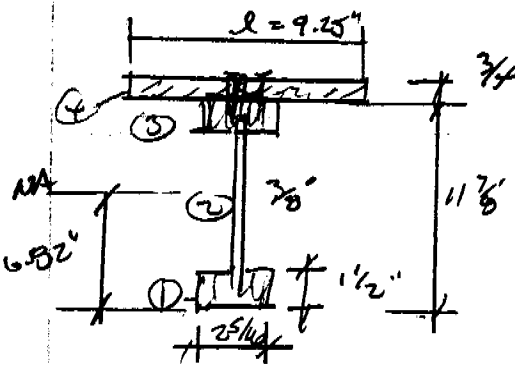

effective $l = 4 \times 2\frac{5}{16} = 9.25'$

(4) Area effective stress ⊥ face grain = 2.094 x 0.75

ISSUED

APR 2 6 2002

Sacramento Building Division

NA

Elem	Area	d	Ad
(1)	3.47	0.75	2.60
(2)	2.74	5.94	16.29
(3)	3.47	11.13	38.60
(4)	1.57	12.26	19.24
	11.25		76.73

This [illegible] and specifications must be kept on the job [illegible] and it is unlawful to make [illegible] from the same without [illegible] permission from the Building [illegible].

The [illegible] this plan and specification SHALL NOT be held to permit or approve the violation of any City Ordinance or State Law.

$NA = \frac{76.73}{11.25} = 6.82$ from Bottom

SR 8/26/01

$I_{NA} = \frac{bd^3}{12} + Ad^2$

REGISTERED PROFESSIONAL ENGINEER
DAVID A. [illegible]
No. 17918
Exp. 12-30-05
CIVIL
STATE OF CALIFORNIA

PACIFIC CONSULTING ENGINEERS
2150 BELL AVE., SUITE 145
SACRAMENTO, CA 95838

STAEDTLER® No. 937 811E Engineer's Computation Pad

2/3

TJI $I_{xx} = \frac{bh^3}{12} = \frac{2.31 \times 11.88^3}{12} - \frac{2.31 - 0.375(7.26)^3}{12}$

$322.76 \text{ in}^4 - 61.70 = 261.06$

$I_{NA} =$

Elem

TJI $261.06 \text{ in}^4 \times 9.68(\overset{0.88}{6.82 - 5.94})^2 = 268.56 \text{ in}^4$

Flr Ply $= 0.063 \times 0.75 + 1.57 \times (11.88 + 0.375 - 6.82)^2 = 46.38$

New $I_{xx} = 314.94$

Check New deflection AT $40_L + 10_D$ 23.58' span

$$\Delta = \frac{5 w (l)^4}{384 EI} = \frac{5 \times 40 \times 1.33 \times (282.96)^4}{384 \times 12 \times 1.8 \times (10)^6 \times 314.94} = 0.65''$$

$0.65'' < 0.70$ All @ $l/360$

Ck Bending Stress

$$f_b = \frac{wl^2 1.5}{S_x} = \frac{50 \times 1.33 \times (23.58)^2 1.5}{S_x}$$

$$= \frac{55,462.6}{S_x}$$

S_x Top $= \frac{I}{5.44} = \frac{314.94}{5.44}$

$= 57.95 \text{ in}^3$

S_x bottom $= \frac{314.94}{6.82} = 46.15 \text{ in}^3$

f_b top $= \frac{55,462.6}{57.95} = 957$ psi

OK

~ Allowable in 3/4 ply ⊥ face grain $C_\perp = 1100$ psi

f_b bottom $= \frac{55,462.6}{46.15} = 1202$ psi ~ Allowable for microlam is 2000 psi

OK

Deflection controls Design -

STAEDTLER No. 937 811E Engineer's Computation Pad

STAEDTLER No. 937 311E Engineer's Computation Pad

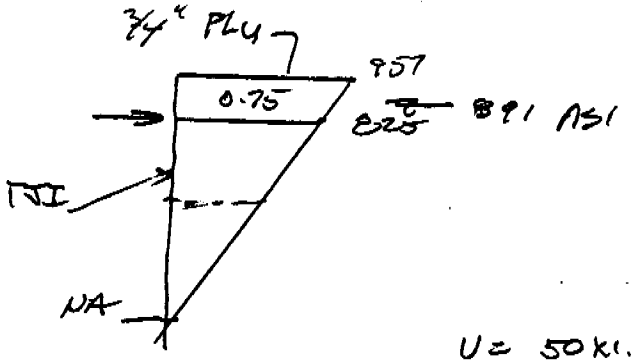

$F = \frac{VQ}{Ib}$

$Q = Ay$
$= 1.57 \times 5.44$
$= 8.53$

$I = 314.94$
$b = 2.31"$

$V = 50 \text{k} \times 1.33 \times 23.59 \text{k}$
$= 784\#$

For Fastener $F = \frac{VQ}{I} = \frac{784\# \times 8.53 \text{ in}^3}{314.5 \text{ in}^4} = 21.26\#/\text{inch}$

Fasten w/ #10 screws

F/screw in plywood = 68# ea

#10 x 2½ min wood screw @ 4" O.C.

4/ft $F = 4 \times 68 = 272$

$F_{act} = 21.26 \times 12 = 255\# < 272\#$

use #10 x 2½" screws @ 4" O.C.
AND composite beam will
safely carry 40 PSF LL + 10 PSF DL
within the Deflection Limits

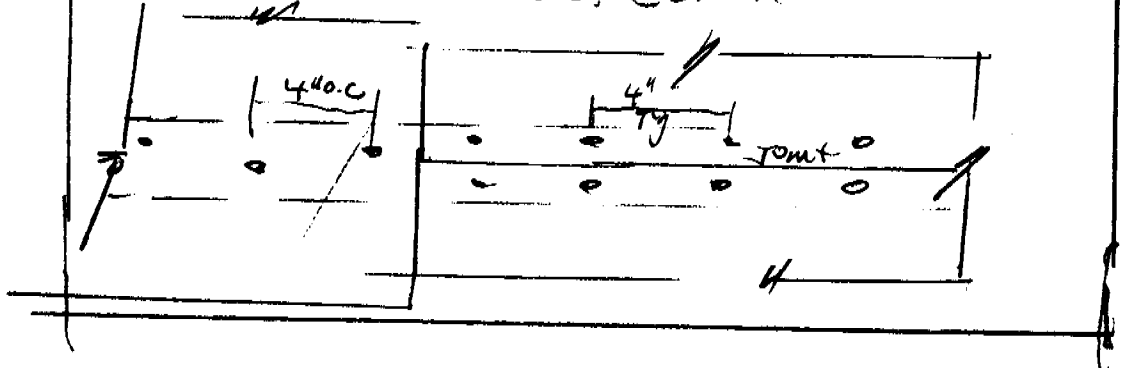

NO MID-SPAN Bcking Required @ TYP's

Date of Request: 6/11/01
By:

CITY OF SACRAMENTO DEVELOPMENT SERVICES DIVISION
PLANNING AND ZONING INFORMATION REQUEST

RECEIVED
JUN 2 3 2001
WOODS & ASSOCIATES

Project Address: 4400 - F STREET

Assessor's Parcel Number: 004-0301-002

Previous Use: RESIDENCE

Description of Request/Proposed Use: EXPANDING RESIDENSE (2nd floor addition)

Is This a Change of Use? NO

Zoning Designation: R-1

Prior Applications for Project Site(P#, Z#, DRPB#): none

Comments: meets lot coverage requirements and setback requirements for non-conforming structure (min 3' side)

Are There Any Planning Issues?: (circle one) YES (NO)

* Staff Site Plan Check Required? (Circle one) YES (NO)
* Field Inspection Required? (Circle one) YES (NO)
* Design Review/Preservation Required?: (Circle one) YES (NO)

Planning Review by/Date: PHIL REED 6/11/01

A list of items that must be reviewed by Planning is provided on the reverse side of this form.

MICROFILM AFTER FINAL

Revised 3/31/99

Certification of Compliance
School District Development Fees

(Print or Type) If Printing, press hard for four copies

PART I. To be completed by the APPLICANT (MUST BE FILLED OUT COMPLETELY)

OWNER'S NAME Cheryl Kurtz

OWNER'S ADDRESS 4408 F Street

PROJECT ADDRESS 4408 F St

PARCEL NUMBER 004-0301-002 LOT NO.

SUBDIVISION NAME

NUMBER OF UNITS

Upon payment of the fees listed below, a 90-day approval period commences upon which the applicant paying the fees may protest such fees. Any failure to file such protest within the 90-day period shall result in forfeiture of any rights to challenge such fees, through litigation or otherwise.

APPLICANT'S SIGNATURE Cheryl Kurtz

TITLE OF APPLICANT Homeowner

DATE 9/17/01. PHONE NUMBER (916) 451-6792

PART II. To be completed by BUILDING DEPARTMENT

PLAN IDENTIFICATION NUMBER 0107337

BUILDING TYPE
RESIDENTIAL (X) APARTMENT/CONDOMINIUM ( ) COMMERCIAL/INDUSTRIAL ( )

SQUARE FEET OF CHARGEABLE BUILDING AREA 617 SQ FT.

SIGNATURE Carlos Vasconcelos

TITLE Permit Tech DATE 9-17-01

PART III. To be completed by SCHOOL DISTRICT

SCHOOL DISTRICT

DISTRICT CERTIFICATION NO.

EXEMPT COMMENTS

RESIDENTIAL/APT/CONDO SQ FT X $ = $

COMMERCIAL/INDUSTRIAL SQ FT X $ = $

OTHER FEE TYPE SQ FT X $ = $

TOTAL FEES COLLECTED = $ 106.24

This Certification covers only the amount of square footage indicated above. Any additions or corrections to the square footage for this project will require an amendment to the Certificate of Compliance.

As the authorized school district official, I hereby certify that the requirements of Government Code Section 65995 and any other authorized requirements have been complied with by the above signed applicant.

AUTHORIZED SCHOOL DISTRICT OFFICIAL

SIGNATURE

TITLE DATE 9/17/01

Original: School District 1st copy: School District 2nd copy: Building Department 3rd copy: Applicant

Revised 12/12/96

OWNER-BUILDER VERIFICATION

ATTENTION PROPERTY OWNERS

An owner-builder building permit has been applied for in your name and bearing your signature.

Please complete and return this information in the envelope provided at your earliest opportunity to avoid unnecessary delay in processing and issuing your building permit. No building permit will be issued until this verification is received.

1. I personally plan to provide the major labor and materials for construction of the proposed Improvement (yes or no)_____

2. I (have/have not) have. signed an application for A building permit for the proposed work.

3. I have contracted with the following person (firm) to provide the proposed construction:

   Name_____Address_____

   City_____Telephone_____

   Contractors License No. _____

4. I plan to provide portions of the work, but I have hired the following person to coordinate, Supervise, and provide the major work.

   Name_____Address_____

   City_____Telephone_____

   Contractors License No._____

5. I will provide some of the work but I have contracted (hired) the following to provide the Work indicated:

Name	Address	Phone	Type of work
Richard Matthews Construction.	6061 Arlington Court. Woodland, Ca.	(916) 952-9202	General Contractor

Signed_____

Job Address 4408 F St.

Permit No: 0107337.

AREA 1-R

0107337

HOMEWOOD TRUSS

✓ LOOMIS OFFICE
3243 Rippey Road
Loomis, CA 95650
Phone: (916) 652-4655
Fax: (916) 652-3860

O MARYSVILLE PLANT
5033 Feather River Blvd.
Marysville, CA 95901
Phone: (530) 743-8855
Fax: (530) 743-8856

Truss Design Submittal

Designed By:	Date:	Technical Representative:
Rick Patterson	September 21, 2001	Mike Crum

* All enclosed drawings are in alpha-numerical order

Client

Dick Mathews Const.

Office Phone:
Office Fax:

Project

Lutz Residence

Sacramento County, Ca.

Site Phone:
Site Contact:

Plan/Elevation:	Floor System:	O
	Roof System:	✓

✓ Original Submittal
O Complete Revision
O Partial Revision: Replaces individual drawings
O Addition: Add to Original Submittal

Work Order # L321

This set of plans and specifications must be kept on the job site at all times and it is unlawful to make any changes or alterations from the plans and specifications without the written permission from the Building Official. Approval of these plans and specifications does not be held to permit or approve the violation of any City Ordinance or State Law.

GABLE END DETA

LUMBER SPECIFICATIONS:
2X4 #2 DF-L CHORDS
2X4 STD. DF-L STUDS

SHEATHING ON ONE FACE REQ.
SHEAR DESIGN BY OTHERS
16-14-10 OR 20-10-10 PSF. LOADING
70 MPH WIND LOADING

* FOR GABLE ASSEMBLY GREATER THAN 5'-10" IN HEIGHT SEE GE-2.

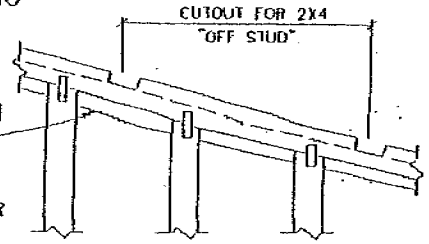

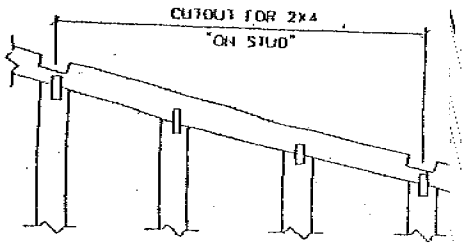

OUTLOOKER DETAILS

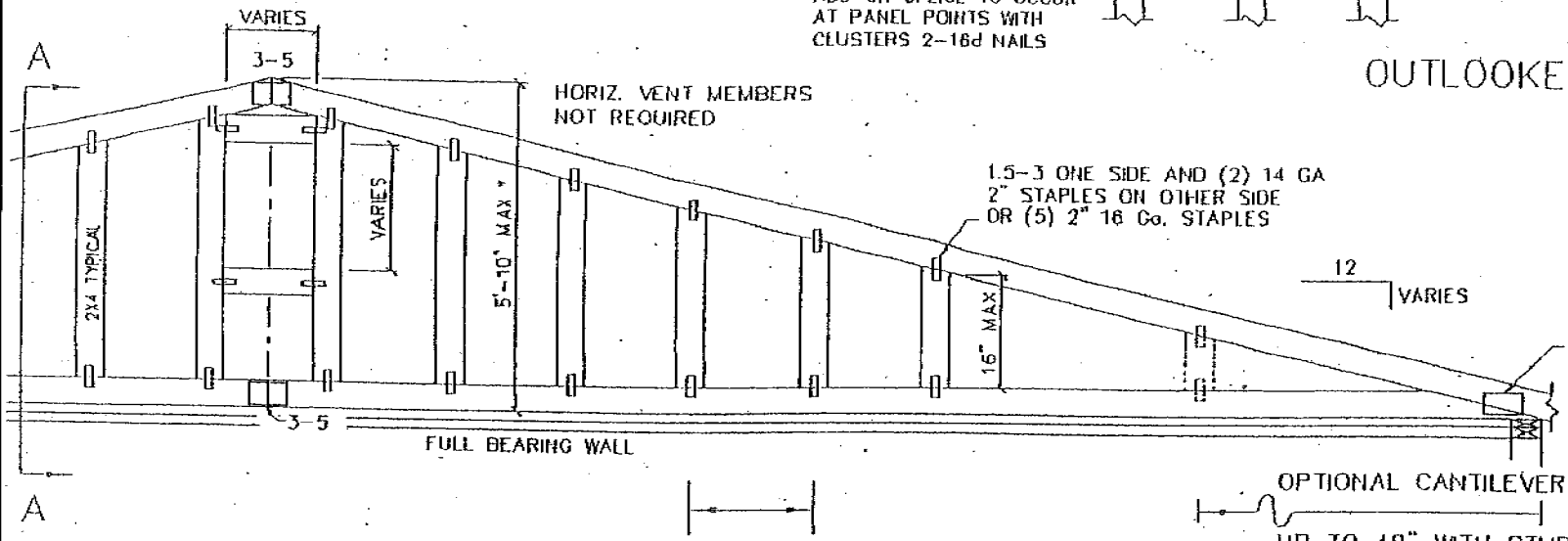

UP TO 24" O.C.

OPTIONAL CANTILEVER
UP TO 48" WITH STUD @ WALL
UP TO 24" NO CHANGE

REGISTERED PROFESSIONAL ENGINEER
LARRY L. MESSAMER
No. 045982
Exp. 12/31/02
CIVIL
STATE OF CALIFORNIA

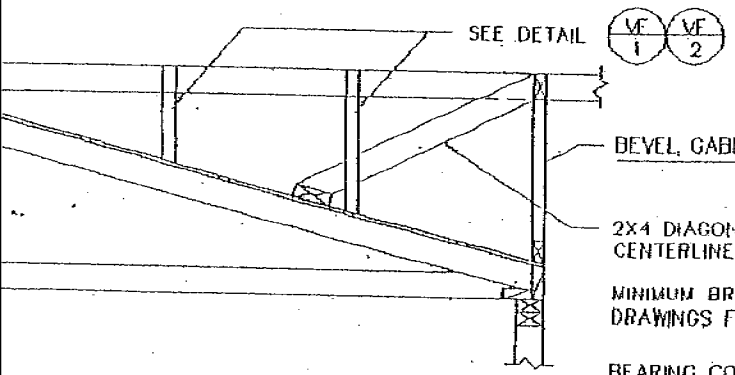

MINIMUM BRACING DETAILS - SEE STRUCTURAL DRAWINGS FOR ADDITIONAL REQUIREMENTS

BEARING CONNECTIONS ARE THE SOLE RESPONSIBILITY OF THE ENGINEER OF RECORD. DETAILS ON THIS PAGE ARE SUGGESTIONS ONLY AND ARE NOT TO BE UTILIZED WITH OUT THE BUILDING DESIGNERS APPROVAL.

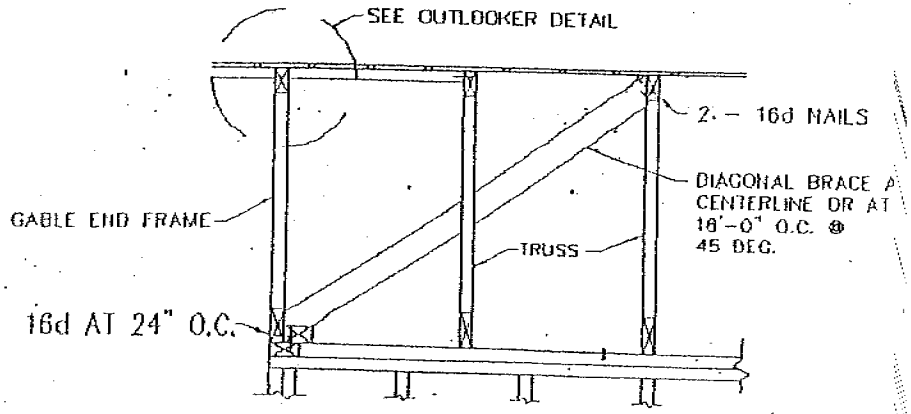

SECTION A

GE 1

SEE TPI HIB-91 FOR OTHER BRACING RECOMMENDATIONS

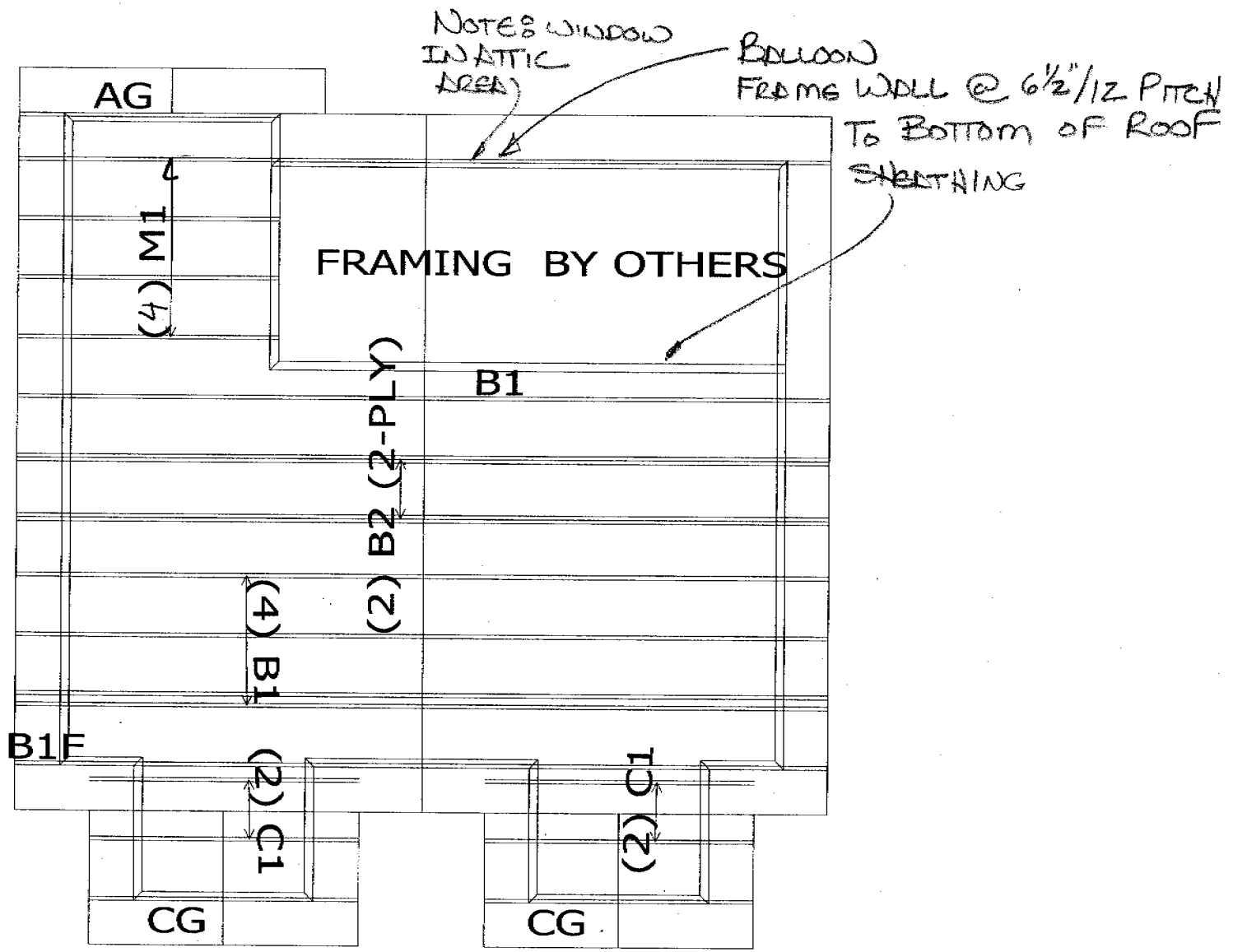

Roofline 3D Layout

TRUSWAL Systems

MATHEWS/NEW RES.
DICK MATHEWS
DOWNTOWN SAC/FST.
SACRAMENTO COUNTY

SALES REP : MC	
DUE DATE :	
DSGNR/CHKR : RP / BW	
TC Live	16.00 psf
TC Dead	9.00 psf
BC Live	0.00 psf
BC Dead	8.00 psf
Total	33.00 psf

WO# : L321	
SCALE : 3/16" = 1'	
Date : 9/19/2001 9:49	
DurFac-Lbr : 1.25	
DurFac-Plt : 1.25	
O.C. Spacing : 24.0	
Design Spec : UBC-97	
#Tr/#Cfg : 19 / 8	

Job Name: MATHEWS/NEW RES. **Truss ID: AG** **Qty: 1** **Drwg: CO01262265-001**

Joint Locations			
1	0- 0- 0	8	0- 0- 0
2	2- 7- 0	9	2- 7- 0
3	2-10- 8	10	2-10- 8
4	3- 7- 8	11	4- 8- 0
5	4- 8- 0	12	4- 4- 8
6	4- 4- 8	13	7- 3- 0
7	7- 3- 0		

TC 2x4 DFL #1
BC 2x4 DFL #1
GBL BLK 2x4 DFL STANDARD
PLATE VALUES PER ICBO RESEARCH REPORT #1607.
<It is assumed that one face of this truss
< is sheathed with plywood, OSB, wood board
< siding or hardboard siding. If not,
< additional loads must be considered on
< non-continuous bearing gables.
May use adequate staples for gable blocks.
Gable studs may require lateral bracing. See Truswals suggested gable bracing detail(s). Lateral loads in line with the chords have not been considered unless noted otherwise. These loads and their connections are the responsibility of the building designer.

Plating spec : ANSI/TPI - 1995
THIS DESIGN IS THE COMPOSITE RESULT OF MULTIPLE LOAD CASES.
BEARING REQUIREMENTS shown are based ONLY on the truss material at each bearing.
PLATING BASED ON GREEN LUMBER VALUES.

This truss is designed using the UBC-97 Code.
Bldg Enclosed = Yes
Truss Location = Not End Zone
Hurricane/Ocean Line = No , Exp Category = C
Bldg Length = 24.25 ft, Bldg Width = 26.50 ft
Mean roof height = 18.15 ft, mph = 75
UBC Standard Occupancy, Dead Load = 14.0 psf

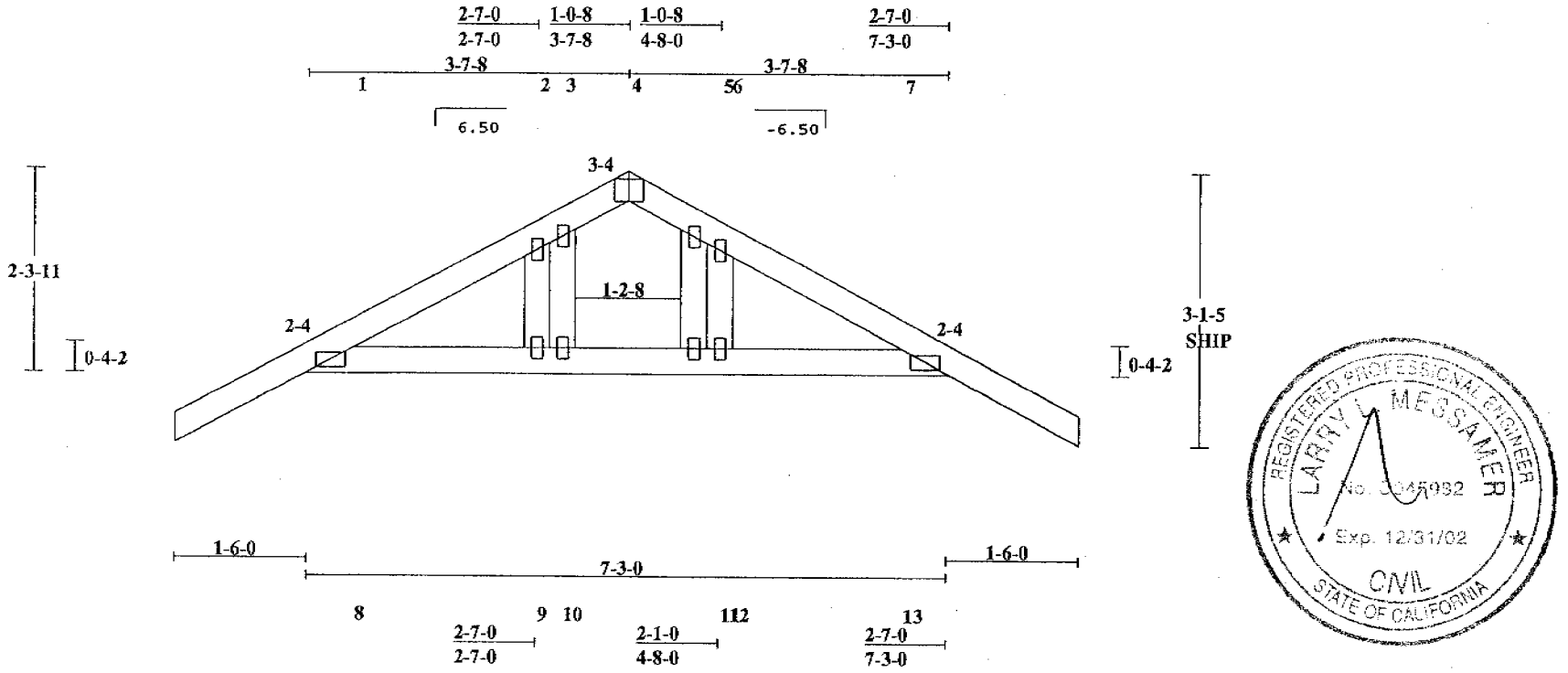

REGISTERED PROFESSIONAL ENGINEER LARRY L. MESSAMER No. 45932 Exp. 12/31/02 CIVIL STATE OF CALIFORNIA

TYPICAL PLATE : 1.5-3

Truswal Systems Plates are 20 ga. unless shown by "18"(18 ga.) or "H"(16 ga.), positioned per Joint Report. Circled plates and false frame plates are positioned as shown above.

OVER CONTINUOUS SUPPORT

9/19/2001

Scale: 1/2" = 1'

Job Name: MATHEWS/NEW RES. **Truss ID: AG** **Qty: 1** **Drwg: CO01262265-001**

HOMEWOOD TRUSS

Truswal Systems - Colorado
4445 Northpark Dr., Colo Springs, CO 80907

Tp5.0 Version T6.2.6

WARNING *Read all notes on this sheet and give a copy of it to the Erecting Contractor.*

This design is for an individual building component not truss system. It has been based on specifications provided by the component manufacturer and done in accordance with the current versions of TPI and AFPA design standards. No responsibility is assumed for dimensional accuracy. Dimensions are to be verified by the component manufacturer and/or building designer prior to fabrication. The building designer must ascertain that the loads utilized on this design meet or exceed the loading imposed by the local building code and the paticular application. The design assumes that the top chord is laterally braced by the roof or floor sheathing and the bottom chord is laterally braced by a rigid sheathing material directly attached, unless otherwise noted. Bracing shown is for lateral support of components members only to reduce buckling length. This component shall not be placed in any environment that will cause the moisture content of the wood to exceed 19% and/or cause connector plate corrosion. Fabricate, handle, install and brace this truss in accordance with the following standards: 'JOINT DETAILS', by Truswal, 'ANSI/TPI 1', 'WTCA 1' - Wood Truss Council of America Standard Design Responsibilities, 'HANDLING INSTALLING AND BRACING METAL PLATE CONNECTED WOOD TRUSSES' - (HIB-91) and 'HIB-91 SUMMARY SHEET' by TPI. The Truss Plate Institute (TPI) is located at 583 D'Onofrio Drive, Madison, Wisconsin 53719. The American Forest and Paper Association (AFPA) is located at 1111 19th Street, NW, Ste 800, Washington, DC 20036.

TBF: 18.7			WO: L321
Chk: BW			Customer Name: DICK MATHEWS
Dsgnr: RP	#LC = 9		
TC Live	16.00 psf		DurFacs L=1.25 P=1.25
TC Dead	9.00 psf		Rep Mbr Bnd 1.15
BC Live	.00 psf		O.C.Spacing 2- 0- 0
BC Dead	8.00 psf		Design Spec UBC-97
TOTAL	33.00 psf		Defl Ratio: L/240 TC: L/240

Job Name: MATHEWS/NEW RES. | Truss ID: B1 | Qty: 4 | Drwg: CO01262265-002

BRG	X-LOC	REACT	SIZE	REQ'D
1	0- 1-12	899	3.50"	1.50"
2	24- 1- 4	899	3.50"	1.50"

TC	FORCE	AXL	END	CSI
1-2	-1321	.01	.29	.30
2-3	-1170	.01	.29	.30
3-4	-1170	.01	.29	.30
4-5	-1321	.01	.29	.30

BC	FORCE	AXL	END	CSI
6-7	1113	.12	.32	.44
7-8	722	.08	.32	.40
8-9	1113	.12	.32	.44

WEB	FORCE	CSI	WEB	FORCE	CSI
2-7	-281	.08	3-8	442	.18
3-7	442	.18	4-8	-281	.08

MAX DEFLECTION (span) :
L/999 IN MEM 7-8 (LIVE)
L= -.09" D= -.09" T= -.18"

===== Joint Locations =====

1	0- 0- 0	6	0- 0- 0
2	6- 0- 0	7	8- 0- 0
3	12- 1- 8	8	16- 3- 0
4	18- 3- 0	9	24- 3- 0
5	24- 3- 0		

TC 2x4 DFL #1
BC 2x4 DFL #1
WEB 2x4 DFL STANDARD
PLATE VALUES PER ICBO RESEARCH REPORT #1607.
Loaded for 10 PSF non-concurrent BOLL.

Plating spec : ANSI/TPI - 1995
THIS DESIGN IS THE COMPOSITE RESULT OF MULTIPLE LOAD CASES.
BEARING REQUIREMENTS shown are based ONLY on the truss material at each bearing.
PLATING BASED ON GREEN LUMBER VALUES.

UPLIFT REACTION(S) :
Support 1 -295 lb
Support 2 -295 lb
This truss is designed using the UBC-97 Code.
Bldg Enclosed = Yes
Truss Location = Not End Zone
Hurricane/Ocean Line = No , Exp Category = C
Bldg Length = 24.25 ft, Bldg Width = 26.50 ft
Mean roof height = 20.45 ft, mph = 75
UBC Standard Occupancy, Dead Load = 14.0 psf

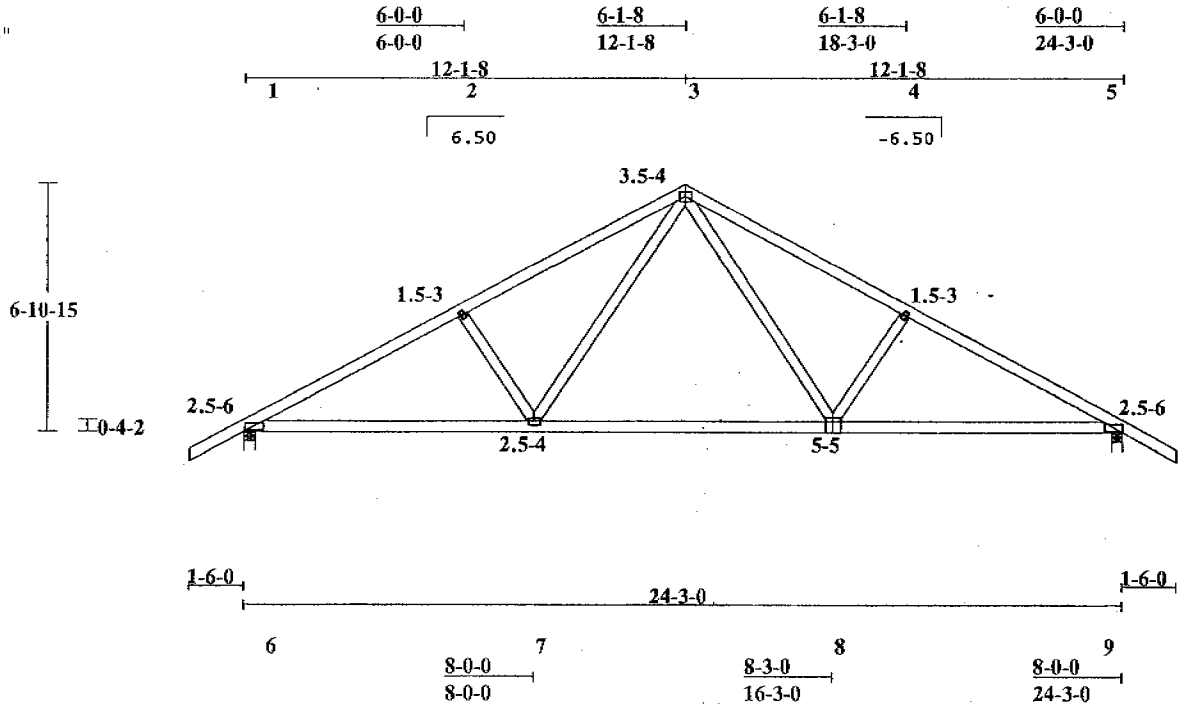

Truswal Systems Plates are 20 ga. unless shown by "18"(18 ga.) or "H"(16 ga.), positioned per Joint Report. Circled plates and false frame plates are positioned as shown above.

9/19/2001
Scale: 3/16" = 1'

Job Name: MATHEWS/NEW RES. | Truss ID: B1 | Qty: 4 | Drwg: CO01262265-002

HOMEWOOD TRUSS

Truswal Systems - Colorado
4445 Northpark Dr., Colo Springs, CO 80907

Tp5.0 Version T6.2.6

WARNING *Read all notes on this sheet and give a copy of it to the Erecting Contractor.*

This design is for an individual building component not truss system. It has been based on specifications provided by the component manufacturer and done in accordance with the current versions of TPI and AFPA design standards. No responsibility is assumed for dimensional accuracy. Dimensions are to be verified by the component manufacturer and/or building designer prior to fabrication. The building designer must ascertain that the loads utilized on this design meet or exceed the loading imposed by the local building code and the paticular application. The design assumes that the top chord is laterally braced by the roof or floor sheathing and the bottom chord is laterally braced by a rigid sheathing material directly attached, unless otherwise noted. Bracing shown is for lateral support of components members only to reduce buckling length. This component shall not be placed in any environment that will cause the moisture content of the wood to exceed 19% and/or cause connector plate corrosion. Fabricate, handle, install and brace this truss in accordance with the following standards: 'JOINT DETAILS', by Truswal, 'ANSI/TPI 1', 'WTCA 1' - Wood Truss Council of America Standard Design Responsibilities, 'HANDLING INSTALLING AND BRACING METAL PLATE CONNECTED WOOD TRUSSES' - (HIB-91) and 'HIB-91 SUMMARY SHEET' by TPI. The Truss Plate Institute (TPI) is located at 583 D'Onofrio Drive, Madison, Wisconsin 53719. The American Forest and Paper Association (AFPA) is located at 1111 19th Street, NW, Ste 800, Washington, DC 20036.

TBF:	54.7		
Chk: BW			
Dsgnr: RP	#LC = 10		
TC Live	16.00 psf		
TC Dead	9.00 psf		
BC Live	.00 psf		
BC Dead	8.00 psf		
TOTAL	33.00 psf		

WO: L321
Customer Name:
DICK MATHEWS

DurFacs L=1.25 P=1.25
Rep Mbr End 1.15
O.C.Spacing 2- 0- 0
Design Spec UBC-97
Defl Ratio: L/240 TC: L/240

Job Name: MATHEWS/NEW RES. | Truss ID: B1F | Qty: 1 | Drwg: CO01262265-003

BRG	X-LOC	REACT	SIZE	REQ'D
1	0- 1-12	899	3.50"	1.50"
2	24- 1- 4	899	3.50"	1.50"

TC	FORCE	AXL	BND	CSI
1-2	-1351	.01	.40	.42
2-3	-932	.01	.57	.58
3-4	-649	.00	.50	.51
4-5	-649	.00	.50	.51
5-6	-932	.01	.57	.58
6-7	-1351	.01	.40	.42

BC	FORCE	AXL	BND	CSI
8-9	1141	.17	.07	.24
9-10	1139	.13	.12	.25
10-11	717	.08	.09	.18
11-12	1139	.13	.12	.25
12-13	1141	.17	.07	.24

WEB	FORCE	CSI	WEB	FORCE	CSI
2-9	158	.06	5-11	316	.13
2-10	-492	.33	6-11	-492	.33
3-10	316	.13	6-12	158	.06

MAX DEFLECTION (span) :
L/999 IN MEM 10-11 (LIVE)
L= -.09" D= -.09" T= -.18"

===== Joint Locations =====

1	0- 0- 0	8	0- 0- 0
2	6- 0- 0	9	6- 0- 0
3	11- 4- 8	10	11- 4- 8
4	12- 1- 8	11	12-10- 8
5	12-10- 8	12	18- 3- 0
6	18- 3- 0	13	24- 3- 0
7	24- 3- 0		

TC	2x4 DFL #1
BC	2x4 DFL #1
WEB	2x4 DFL STANDARD
GBL BLK	2x4 DFL STANDARD

PLATE VALUES PER ICBO RESEARCH REPORT #1607.
Gable blocks are 2x 4 @ 16.0 in. o.c. MAX.
<It is assumed that one face of this truss
< is sheathed with plywood, OSB, wood board
< siding or hardboard siding. If not,
< additional loads must be considered on
< non-continuous bearing gables.
May use adequate staples for gable blocks.
Gable studs may require lateral bracing. See Truswals suggested gable bracing detail(s).
Lateral loads in line with the chords have not been considered unless noted otherwise.
These loads and their connections are the responsibility of the building designer.

Plating spec : ANSI/TPI - 1995
THIS DESIGN IS THE COMPOSITE RESULT OF MULTIPLE LOAD CASES.
BEARING REQUIREMENTS shown are based ONLY on the truss material at each bearing.
Loaded for 10 PSF non-concurrent BOLL.
PLATING BASED ON GREEN LUMBER VALUES.

UPLIFT REACTION(S) :
Support 1 -295 lb
Support 2 -295 lb
This truss is designed using the UBC-97 Code.
Bldg Enclosed = Yes
Truss Location = Not End Zone
Hurricane/Ocean Line = No , Exp Category = C
Bldg Length = 24.25 ft, Bldg Width = 26.50 ft
Mean roof height = 20.45 ft, mph = 75
UBC Standard Occupancy, Dead Load = 14.0 psf

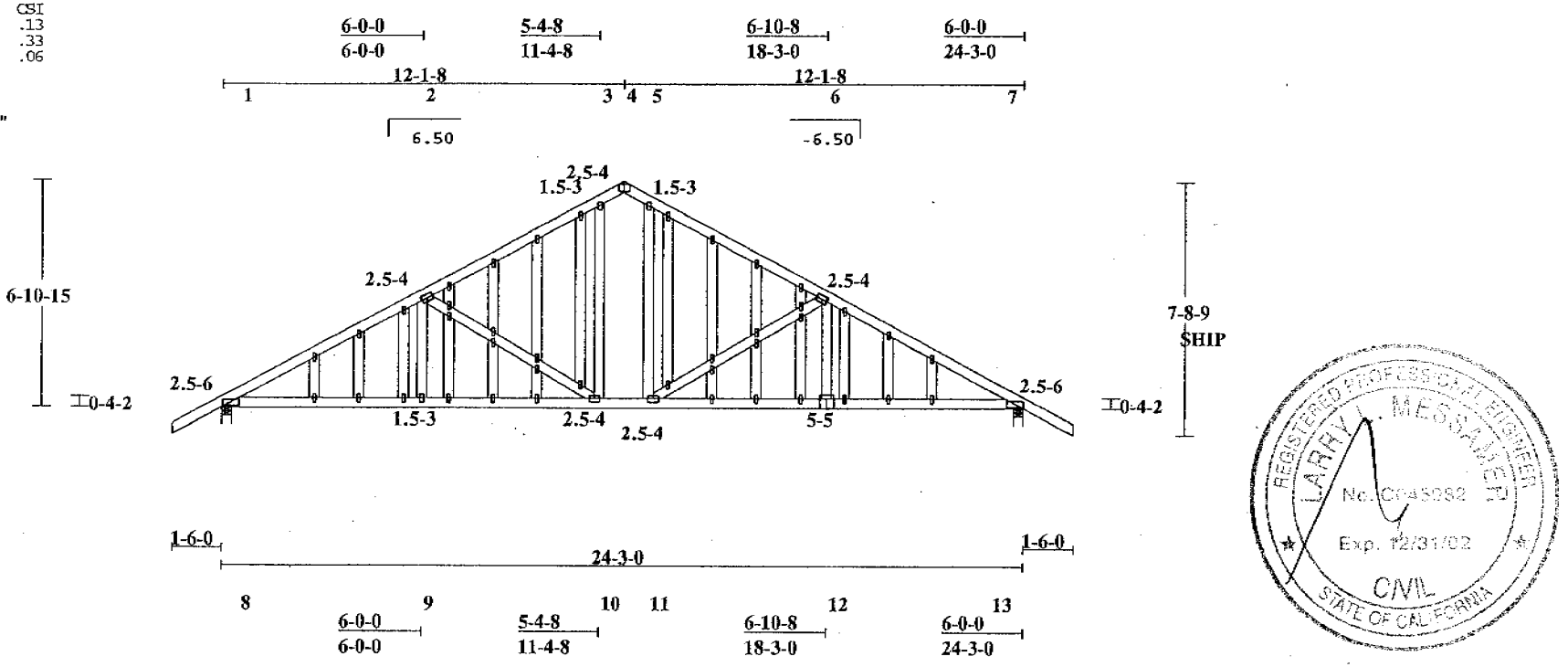

REGISTERED PROFESSIONAL ENGINEER
LARRY L. MEDSKER
No. C043082
Exp. 12/31/02
CIVIL
STATE OF CALIFORNIA

TYPICAL PLATE : 1-3

Truswal Systems Plates are 20 ga. unless shown by "18"(18 ga.) or "H"(16 ga.), positioned per Joint Report. Circled plates and false frame plates are positioned as shown above.

9/19/2001
Scale: 3/16" = 1'

Job Name: MATHEWS/NEW RES. | Truss ID: B1F | Qty: 1 | Drwg: CO01262265-003

HOMEWOOD TRUSS

Truswal Systems - Colorado
4445 Northpark Dr., Colo Springs, CO 80907

Tp5.0 Version T6.2.6

WARNING *Read all notes on this sheet and give a copy of it to the Erecting Contractor.*

This design is for an individual building component not truss system. It has been based on specifications provided by the component manufacturer and done in accordance with the current versions of TPI and AFPA design standards. No responsibility is assumed for dimensional accuracy. Dimensions are to be verified by the component manufacturer and/or building designer prior to fabrication. The building designer must ascertain that the loads utilized on this design meet or exceed the loading imposed by the local building code and the particular application. The design assumes that the top chord is laterally braced by the roof or floor sheathing and the bottom chord is laterally braced by a rigid sheathing material directly attached, unless otherwise noted. Bracing shown is for lateral support of components members only to reduce buckling length. This component shall not be placed in any environment that will cause the moisture content of the wood to exceed 19% and/or cause connector plate corrosion. Fabricate, handle, install and brace this truss in accordance with the following standards: 'JOINT DETAILS', by Truswal, 'ANSI/TPI 1', 'WTCA 1' - Wood Truss Council of America Standard Design Responsibilities, 'HANDLING INSTALLING AND BRACING METAL PLATE CONNECTED WOOD TRUSSES' - (HIB-91) and 'HIB-91 SUMMARY SHEET' by TPI. The Truss Plate Institute (TPI) is located at 583 D'Onofrio Drive, Madison, Wisconsin 53719. The American Forest and Paper Association (AFPA) is located at 1111 19th Street, NW, Ste 800, Washington, DC 20036.

TBF: 102.7	
Chk: BW	
Dsgnr: RP	#LC = 10
TC Live	16.00 psf
TC Dead	9.00 psf
BC Live	.00 psf
BC Dead	8.00 psf
TOTAL	33.00 psf

WO: L321	
Customer Name:	
DICK MATHEWS	
DurFacs	L=1.25 P=1.25
Rep Mbr Bnd	1.15
O.C.Spacing	2- 0- 0
Design Spec	UBC-97
Defl Ratio:	L/240 TC: L/240

Job Name: MATHEWS/NEW RES. | Truss ID: B2 | Qty: 4 | Drwg: CO01262265-004

BRG	X-LOC	REACT	SIZE	REQ'D
1	0- 1-12	1299	3.50"	1.50"
2	24- 1- 4	1299	3.50"	1.50"

TC	FORCE	AXL	BND	CSI
1-2	-2225	.01	.21	.23
2-3	-2077	.00	.17	.17
3-4	-2077	.00	.17	.17
4-5	-2225	.01	.21	.23

BC	FORCE	AXL	BND	CSI
6-7	1891	.14	.50	.65
7-8	1253	.09	.53	.62
8-9	1891	.14	.50	.65

WEB	FORCE	CSI	WEB	FORCE	CSI
2-7	295	.05	3-8	944	.19
3-7	944	.19	4-8	295	.05

MAX DEFLECTION (span) :
L/999 IN MEM 7-8 (LIVE)
L= -.19" D= -.21" T= -.40"

===== Joint Locations =====

1	0- 0- 0	6	0- 0- 0
2	6- 0- 0	7	8- 0- 0
3	12- 1- 8	8	16- 3- 0
4	18- 3- 0	9	24- 3- 0
5	24- 3- 0		

TC	2x4	DFL #1
BC	2x4	DFL #1
WEB	2x4	DFL STANDARD

PLATE VALUES PER ICBO RESEARCH REPORT #1607.
Loaded for 10 PSF non-concurrent BCLL.
Permanent bracing is required (by others) to prevent rotation/toppling. See HIB-91 and ANSI/TPI 1-1995; 10.3.4.5 and 10.3.4.6.
PLATING BASED ON GREEN LUMBER VALUES.
2-PLY! Nail w/10d COMMON, staggered (NDS-97 Sect. 12) in: TC- 2/ft BC- 2/ft WEBS- 2/ft

Plating spec : ANSI/TPI - 1995
THIS DESIGN IS THE COMPOSITE RESULT OF MULTIPLE LOAD CASES.
BEARING REQUIREMENTS shown are based ONLY on the truss material at each bearing.
+ +
Nail pattern shown is for PLF loads only. Concentrated loads MUST be distributed to each ply equally. On multi-ply with hangers, use 3" nails min. into the carrying member. For more than 2 ply, add nail cluster from additional ply(s) and/or bolts if shown, or use any other approved detail (by others).
+ +

UPLIFT REACTION(S) :
Support 1 -405 lb
Support 2 -405 lb
This truss is designed using the UBC-97 Code.
Bldg Enclosed = Yes
Truss Location = Not End Zone
Hurricane/Ocean Line = No , Exp Category = C
Bldg Length = 24.25 ft, Bldg Width = 26.50 ft
Mean roof height = 20.45 ft, mph = 75
UBC Standard Occupancy, Dead Load = 14.0 psf

----------LOAD CASE #1 DESIGN LOADS ----------

Dir	L.Plf	L.Loc	R.Plf	R.Loc	LL/TL
TC Vert	50.00	0- 0- 0	50.00	24- 3- 0	.64
BC Vert	16.00	0- 0- 0	16.00	24- 3- 0	.00

...Type...	lbs	X.Loc	LL/TL
BC Vert	400.0	10- 1- 8	.48
BC Vert	400.0	14- 1- 8	.00

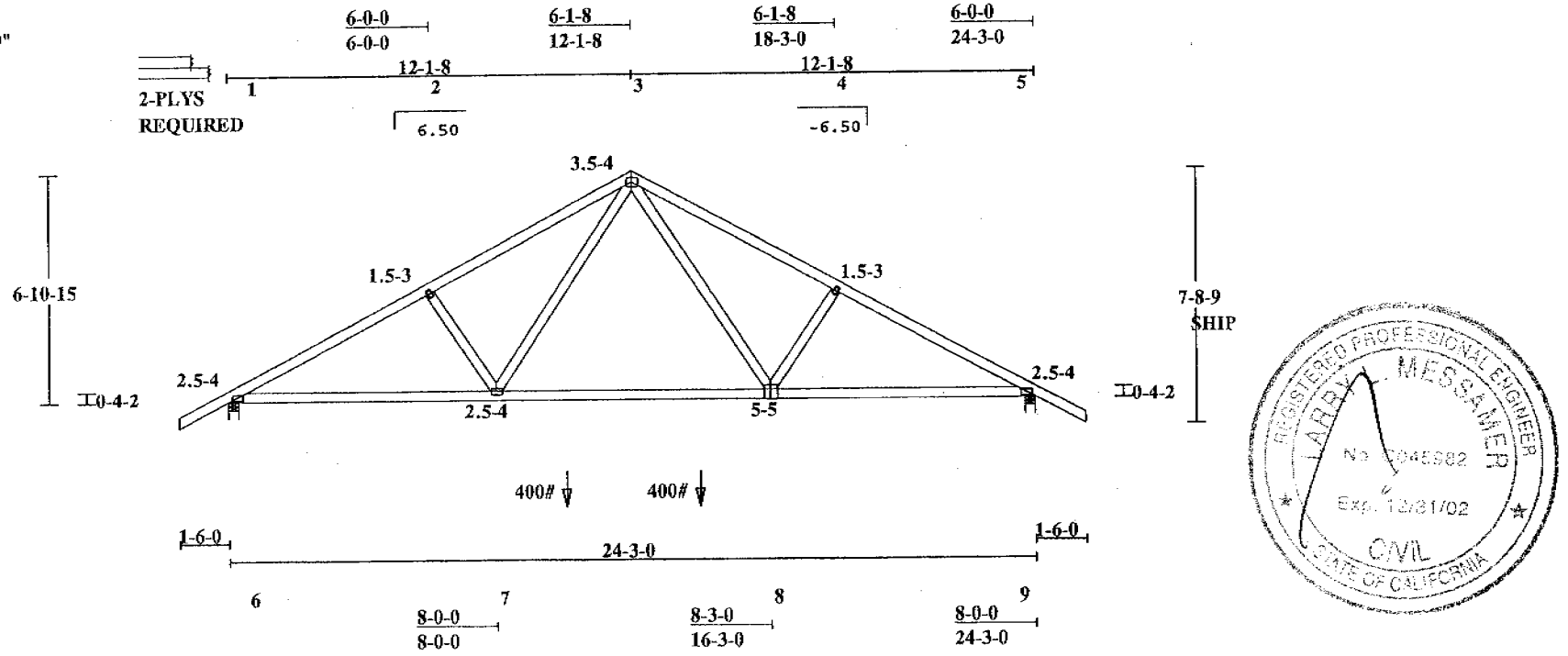

REGISTERED PROFESSIONAL ENGINEER LARRY MES SAMER No 045582 Exp. 12/31/02 CIVIL STATE OF CALIFORNIA

Truswal Systems Plates are 20 ga. unless shown by "18"(18 ga.) or "H"(16 ga.), positioned per Joint Report. Circled plates and false frame plates are positioned as shown above.

9/19/2001

Scale: 3/16" = 1'

Job Name: MATHEWS/NEW RES. | Truss ID: B2 | Qty: 4 | Drwg: CO01262265-004

HOMEWOOD TRUSS

Truswal Systems - Colorado
4445 Northpark Dr., Colo Springs, CO 80907

Tp5.0 Version T6.2.6

WARNING *Read all notes on this sheet and give a copy of it to the Erecting Contractor.*

This design is for an individual building component not truss system. It has been based on specifications provided by the component manufacturer and done in accordance with the current versions of TPI and AFPA design standards. No responsibility is assumed for dimensional accuracy. Dimensions are to be verified by the component manufacturer and/or building designer prior to fabrication. The building designer must ascertain that the loads utilized on this design meet or exceed the loading imposed by the local building code and the particular application. The design assumes that the top chord is laterally braced by the roof or floor sheathing and the bottom chord is laterally braced by a rigid sheathing material directly attached, unless otherwise noted. Bracing shown is for lateral support of components members only to reduce buckling length. This component shall not be placed in any environment that will cause the moisture content of the wood to exceed 19% and/or cause connector plate corrosion. Fabricate, handle, install and brace this truss in accordance with the following standards: 'JOINT DETAILS', by Truswal, 'ANSI/TPI 1', 'WTCA 1' - Wood Truss Council of America Standard Design Responsibilities, 'HANDLING INSTALLING AND BRACING METAL PLATE CONNECTED WOOD TRUSSES' - (HIB-91) and 'HIB-91 SUMMARY SHEET' by TPI. The Truss Plate Institute (TPI) is located at 583 D'Onofrio Drive, Madison, Wisconsin 53719. The American Forest and Paper Association (AFPA) is located at 1111 19th Street, NW, Ste 800, Washington, DC 20036.

TBF: 54.7	
Chk: BW	
Dsgnr: RP	#LC = 10
TC Live	16.00 psf
TC Dead	9.00 psf
BC Live	.00 psf
BC Dead	8.00 psf
TOTAL	33.00 psf

WO: L321	
Customer Name:	
DICK MATHEWS	
DurFact	L=1.25 P=1.25
Rep Mbr Bnd	1.00
O.C.Spacing	2- 0- 0
Design Spec	UBC-97
Defl Ratio:	L/240 TC: L/240

Job Name: MATHEWS/NEW RES. **Truss ID: C1** **Qty: 2** **Drwg: CO01262265-005**

BRG	X-LOC	REACT	SIZE	REQ'D
1	0- 1-12	297	3.50"	1.50"
2	5-10- 4	297	3.50"	1.50"

TC	FORCE	AXL	BND	CSI
1-2	-236	.00	.05	.05
2-3	-236	.00	.05	.05

BC	FORCE	AXL	BND	CSI
4-5	183	.03	.03	.05
5-6	183	.03	.03	.05

WEB	FORCE	CSI	WEB	FORCE	CSI
2-5	59	.02			

MAX DEFLECTION (span) :
L/999 IN MEM 4-5 (LIVE)
L= .00" D= .00" T= .00"

===== Joint Locations =====

1	0- 0- 0	4	0- 0- 0
2	3- 0- 0	5	3- 0- 0
3	6- 0- 0	6	6- 0- 0

TC	2x4	DFL	#1
BC	2x4	DFL	#1
WEB	2x4	DFL	STANDARD

PLATE VALUES PER ICBO RESEARCH REPORT #1607.
PLATING BASED ON GREEN LUMBER VALUES.

Plating spec : ANSI/TPI - 1995
THIS DESIGN IS THE COMPOSITE RESULT OF MULTIPLE LOAD CASES.
BEARING REQUIREMENTS shown are based ONLY on the truss material at each bearing.

UPLIFT REACTION(S) :
Support 1 -90 lb
Support 2 -90 lb
This truss is designed using the UBC-97 Code.
Bldg Enclosed = Yes
Truss Location = Not End Zone
Hurricane/Ocean Line = No , Exp Category = C
Bldg Length = 24.25 ft, Bldg Width = 26.50 ft
Mean roof height = 17.98 ft, mph = 75
UBC Standard Occupancy, Dead Load = 14.0 psf

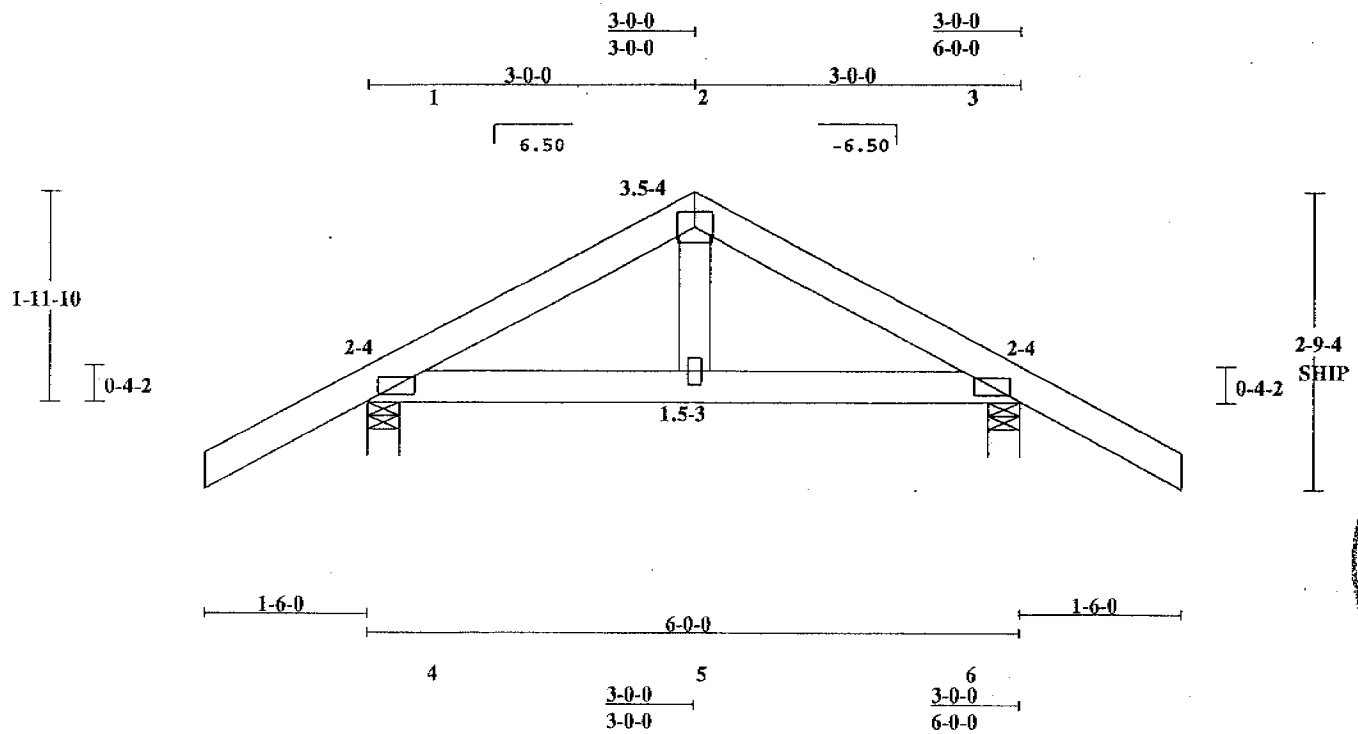

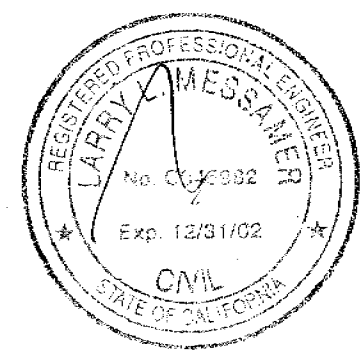

Truswal Systems Plates are 20 ga. unless shown by "18"(18 ga.) or "H"(16 ga.), positioned per Joint Report. Circled plates and false frame plates are positioned as shown above.

9/19/2001
Scale: 9/16" = 1'

Job Name: MATHEWS/NEW RES. **Truss ID: C1** **Qty: 2** **Drwg: CO01262265-005**

HOMEWOOD TRUSS

Truswal Systems - Colorado
4445 Northpark Dr., Colo Springs, CO 80907

Tp5.0 Version T6.2.6

WARNING ***Read all notes on this sheet and give a copy of it to the Erecting Contractor.***

This design is for an individual building component not truss system. It has been based on specifications provided by the component manufacturer and done in accordance with the current versions of TPI and AFPA design standards. No responsibility is assumed for dimensional accuracy. Dimensions are to be verified by the component manufacturer and/or building designer prior to fabrication. The building designer must ascertain that the loads utilized on this design meet or exceed the loading imposed by the local building code and the paticular application. The design assumes that the top chord is laterally braced by the roof or floor sheathing and the bottom chord is laterally braced by a rigid sheathing material directly attached, unless otherwise noted. Bracing shown is for lateral support of components members only to reduce buckling length. This component shall not be placed in any environment that will cause the moisture content of the wood to exceed 19% and/or cause connector plate corrosion. Fabricate, handle, install and brace this truss in accordance with the following standards: 'JOINT DETAILS', by Truswal, 'ANSI/TPI 1', 'WTCA 1' - Wood Truss Council of America Standard Design Responsibilities, 'HANDLING INSTALLING AND BRACING METAL PLATE CONNECTED WOOD TRUSSES' - (HIB-91) and 'HIB-91 SUMMARY SHEET' by TPI. The Truss Plate Institute (TPI) is located at 583 D'Onofrio Drive, Madison, Wisconsin 53719. The American Forest and Paper Association (AFPA) is located at 1111 19th Street, NW, Ste 800, Washington, DC 20036.

TBF: 13.3		WO: L321
Chk: BW		Customer Name:
Dsgnr: RP	#LC = 9	DICK MATHEWS
TC Live	16.00 psf	DurFacs L=1.25 P=1.25
TC Dead	9.00 psf	Rep Mbr Bnd 1.15
BC Live	.00 psf	O.C.Spacing 2- 0- 0
BC Dead	8.00 psf	Design Spec UBC-97
TOTAL	33.00 psf	Defl Ratio: L/240 TC: L/240

Job Name: MATHEWS/NEW RES. **Truss ID: CG** **Qty: 1** **Drwg: CO01262265-006**

===== Joint Locations =====

1	0- 0- 0	6	0- 0- 0
2	2- 8- 0	7	2- 8- 0
3	3- 0- 0	8	3- 4- 0
4	3- 4- 0	9	6- 0- 0
5	6- 0- 0		

TC 2x4 DFL #1
BC 2x4 DFL #1
GBL BLK 2x4 DFL STANDARD
PLATE VALUES PER ICBO RESEARCH REPORT #1607.
<It is assumed that one face of this truss
< is sheathed with plywood, OSB, wood board
< siding or hardboard siding. If not,
< additional loads must be considered on
< non-continuous bearing gables.
May use adequate staples for gable blocks.
Gable studs may require lateral bracing. See Truswals suggested gable bracing detail(s).
Lateral loads in line with the chords have not been considered unless noted otherwise.
These loads and their connections are the responsibility of the building designer.

Plating spec : ANSI/TPI - 1995
THIS DESIGN IS THE COMPOSITE RESULT OF MULTIPLE LOAD CASES.
BEARING REQUIREMENTS shown are based ONLY on the truss material at each bearing.
PLATING BASED ON GREEN LUMBER VALUES.

This truss is designed using the UBC-97 Code.
Bldg Enclosed = Yes
Truss Location = Not End Zone
Hurricane/Ocean Line = No , Exp Category = C
Bldg Length = 24.25 ft, Bldg Width = 26.50 ft
Mean roof height = 17.98 ft, mph = 75
UBC Standard Occupancy, Dead Load = 14.0 psf

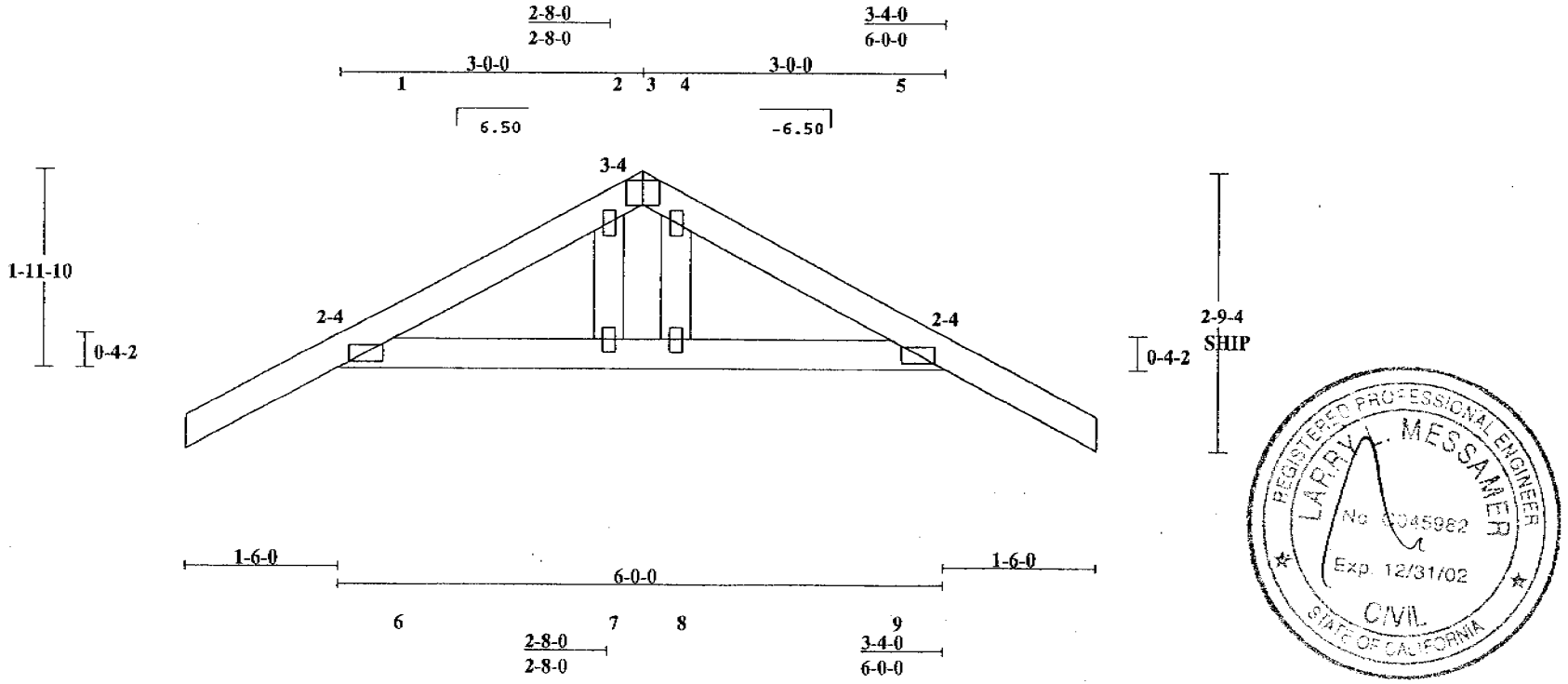

REGISTERED PROFESSIONAL ENGINEER
LARRY L. MESSAMER
No. 045982
Exp. 12/31/02
CIVIL
STATE OF CALIFORNIA

TYPICAL PLATE : 1.5-3

Truswal Systems Plates are 20 ga. unless shown by "18"(18 ga.) or "H"(16 ga.), positioned per Joint Report. Circled plates and false frame plates are positioned as shown above.

OVER CONTINUOUS SUPPORT

9/19/2001

Scale: 9/16" = 1'

Job Name: MATHEWS/NEW RES. **Truss ID: CG** **Qty: 1** **Drwg: CO01262265-006**

HOMEWOOD TRUSS

Truswal Systems - Colorado
4445 Northpark Dr., Colo Springs, CO 80907

Tp5.0 Version T6.2.6

WARNING *Read all notes on this sheet and give a copy of it to the Erecting Contractor.*

This design is for an individual building component not truss system. It has been based on specifications provided by the component manufacturer and done in accordance with the current versions of TPI and AFPA design standards. No responsibility is assumed for dimensional accuracy. Dimensions are to be verified by the component manufacturer and/or building designer prior to fabrication. The building designer must ascertain that the loads utilized on this design meet or exceed the loading imposed by the local building code and the paticular application. The design assumes that the top chord is laterally braced by the roof or floor sheathing and the bottom chord is laterally braced by a rigid sheathing material directly attached, unless otherwise noted. Bracing shown is for lateral support of components members only to reduce buckling length. This component shall not be placed in any environment that will cause the moisture content of the wood to exceed 19% and/or cause connector plate corrosion. Fabricate, handle, install and brace this truss in accordance with the following standards: 'JOINT DETAILS', by Truswal, 'ANSI/TPI 1', 'WTCA 1' - Wood Truss Council of America Standard Design Responsibilities, 'HANDLING INSTALLING AND BRACING METAL PLATE CONNECTED WOOD TRUSSES' - (HIB-91) and 'HIB-91 SUMMARY SHEET' by TPI. The Truss Plate Institute (TPI) is located at 583 D'Onofrio Drive, Madison, Wisconsin 53719. The American Forest and Paper Association (AFPA) is located at 1111 19th Street, NW, Ste 800, Washington, DC 20036.

TBF: 14.7	
Chk: BW	
Dsgnr: RP	#LC = 9
TC Live	16.00 psf
TC Dead	9.00 psf
BC Live	.00 psf
BC Dead	8.00 psf
TOTAL	33.00 psf

WO: L321
Customer Name: DICK MATHEWS

DurFacs	L=1.25 P=1.25
Rep Mbr Bnd	1.15
O.C.Spacing	2- 0- 0
Design Spec	UBC-97
Defl Ratio:	L/240 TC: L/240

Job Name: MATHEWS/NEW RES. | Truss ID: M1 | Qty: 3 | Drwg: CO01262265-007

BRG	X-LOC	REACT	SIZE	REQ'D
1	0- 1-12	338	3.50"	1.50"
2	7- 1- 4	239	3.50"	1.50"

TC	FORCE	AXL	END	CSI
1-2	-117	.00	.45	.45

BC	FORCE	AXL	END	CSI
3-4	172	.00	.30	.30

WEB	FORCE	CSI
2-4	-164	.04

MAX DEFLECTION (span) :
L/999 IN MEM 3-4 (LIVE)
L= -.08" D= -.08" T= -.16"

===== Joint Locations =====

1	0- 0- 0	3	0- 0- 0
2	7- 3- 0	4	7- 3- 0

TC 2x4 DEL #1
BC 2x4 DEL #1
WEB 2x4 DEL STANDARD
PLATE VALUES PER ICBO RESEARCH REPORT #1607.
Loaded for 10 PSF non-concurrent BCLL.
End verticals designed for axial loads only.
End verticals that are extended above or below the truss profile (if any) may require additional design consideration (by others) for lateral forces due to wind or seismic loads on the building.

Plating spec : ANSI/TPI - 1995
THIS DESIGN IS THE COMPOSITE RESULT OF MULTIPLE LOAD CASES.
BEARING REQUIREMENTS shown are based ONLY on the truss material at each bearing.
PLATING BASED ON GREEN LUMBER VALUES.

UPLIFT REACTION(S) :
Support 1 -51 lb
Support 2 -113 lb
This truss is designed using the UBC-97 Code.
Bldg Enclosed = Yes
Truss Location = Not End Zone
Hurricane/Ocean Line = No , Exp Category = C
Bldg Length = 24.25 ft, Bldg Width = 26.50 ft
Mean roof height = 18.97 ft, mph = 75
UBC Standard Occupancy, Dead Load = 14.0 psf

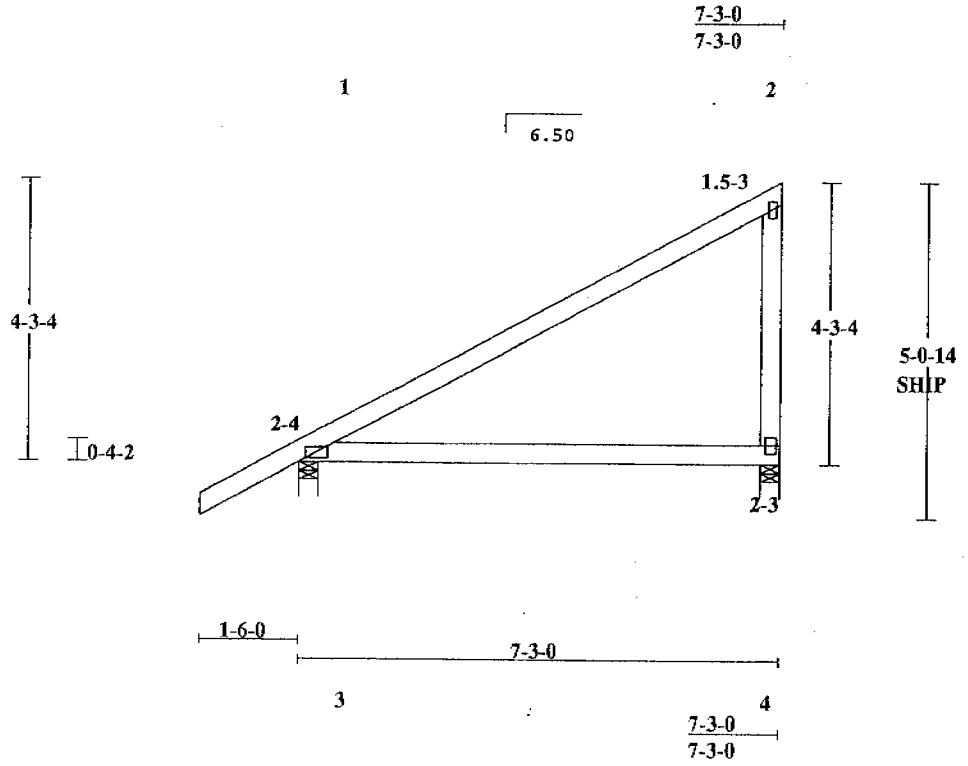

Truswal Systems Plates are 20 ga. unless shown by "18"(18 ga.) or "H"(16 ga.), positioned per Joint Report. Circled plates and false frame plates are positioned as shown above.

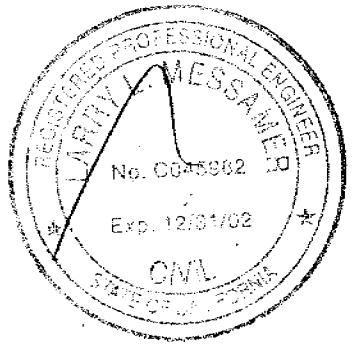

9/19/2001

Scale: 11/32" = 1'

Job Name: MATHEWS/NEW RES. | Truss ID: M1 | Qty: 3 | Drwg: CO01262265-007

HOMEWOOD TRUSS

Truswal Systems - Colorado
4445 Northpark Dr., Colo Springs, CO 80907

Tp5.0 Version T6.2.6

WARNING ***Read all notes on this sheet and give a copy of it to the Erecting Contractor.***

This design is for an individual building component not truss system. It has been based on specifications provided by the component manufacturer and done in accordance with the current versions of TPI and AFPA design standards. No responsibility is assumed for dimensional accuracy. Dimensions are to be verified by the component manufacturer and/or building designer prior to fabrication. The building designer must ascertain that the loads utilized on this design meet or exceed the loading imposed by the local building code and the paticular application. The design assumes that the top chord is laterally braced by the roof or floor sheathing and the bottom chord is laterally braced by a rigid sheathing material directly attached, unless otherwise noted. Bracing shown is for lateral support of components members only to reduce buckling length. This component shall not be placed in any environment that will cause the moisture content of the wood to exceed 19% and/or cause connector plate corrosion. Fabricate, handle, install and brace this truss in accordance with the following standards: 'JOINT DETAILS', by Truswal, 'ANSI/TPI 1', 'WTCA 1' - Wood Truss Council of America Standard Design Responsibilities, 'HANDLING INSTALLING AND BRACING METAL PLATE CONNECTED WOOD TRUSSES' - (HIB-91) and 'HIB-91 SUMMARY SHEET' by TPI. The Truss Plate Institute (TPI) is located at 583 D'Onofrio Drive, Madison, Wisconsin 53719. The American Forest and Paper Association (AFPA) is located at 1111 19th Street, NW, Ste 800, Washington, DC 20036.

TBF: 16.0			WO: L321
Chk: BW			Customer Name: DICK MATHEWS
Dsgnr: RP	#LC = 10		
TC Live	16.00 psf		DurFacs L=1.25 P=1.25
TC Dead	9.00 psf		Rep Mbr Bnd 1.15
BC Live	.00 psf		O.C.Spacing 2- 0- 0
BC Dead	8.00 psf		Design Spec UBC-97
TOTAL	33.00 psf		Defl Ratio: L/240 TC: L/240