CONSTRUCTION LENDING AGENCY

I hereby affirm under penalty of perjury that there is a construction lending agency for the performance of the work for which this permit is issued (Sec. 3097, Civ.C).

Lenders Name _____

Lenders Address _____

LICENSED CONTRACTORS DECLARATION

I hereby affirm under penalty of perjury that I am licensed under provisions of Chapter 9 (commencing with Section 7000) of Division 3 of the Business and Professions Code and my license is in full force and effect.

License Class C-39 Lic. Number 691515

Date 8-16-97 Contractor Norman A. Sells
(Signature)

OWNER - BUILDER DECLARATION

I hereby affirm under penalty of perjury that I am exempt from the Contractors License Law for the following reason (Sec. 7031.5, Business and Professions Code: Any city or county which requires a permit to construct, alter, improve, demolish, or repair any structure, prior to its issuance, also requires the applicant for such permit to file a signed statement that he or she is licensed pursuant to the provisions of the Contractors License Law (Chapter 9 (commencing with Section 7000) of Division 8 of the Business and Professions Code) or that he or she is exempt therefrom and the basis for the alleged exemption. Any violation of Section 7031.5 by any applicant for a permit subjects the applicant to a civil penalty of not more than five hundred dollars ($500.00):

☐ I, as owner of the property, or my employees with wages as their sole compensation, will do the work, and the structure is not intended or offered for sale (Sec. 7044, Business and Professions Code: The Contractors License Law does not apply to an owner of property who builds or improves thereon, and who does such work himself or herself or through his or her own employees, provided that such improvements are not intended or offered for sale. If, however, the building or improvement is sold within one year of completion, the owner-builder will have the burden of proving that he or she did not build or improve for the purpose of sale.)

☐ I, as owner of the property, am exclusively contracting with licensed contractors to construct the project (Sec. 7044, Business and Professions Code: The Contractors License Law does not apply to an owner of property who builds or improves thereon, and who contracts for such projects with a contractor(s) licensed pursuant to the Contractors License Law).

☐ I am exempt under Sec. _____ B & P C for this reason _____

Date _____ Owner _____
(Signature)

In issuing this building permit, the applicant represents, and the City relies on the representation of the applicant, that the applicant verified all measurements and locations shown on the application or accompanying drawings and that the improvement to be constructed does not violate any law or private agreement relating to permissible or prohibited locations for such improvements. This building permit does not authorize any illegal location of any improvement or the violation of any private agreement relating to location of improvements.

I certify that I have read this application and state that all information is correct. I agree to comply with all city and county ordinances and state laws relating to building construction and hereby authorize representative of this city to enter upon the abovementioned property for inspection purposes.

8-16-97 Norman A. Sells
Date Signature of Applicant or Agent

BUILDING SITE ADDRESS: 5625 Caleb Ave. SACTO. SUITE: HV INSP. AREA: LR

ASSESSOR PARCEL NO.: 005-0092-015 COMMUNITY PLAN NO.: 298-B4 PLAN CHECK NO.: RC

NAME OF APPLICANT	ADDRESS	ZIP CODE	PHONE NO.
LICENSED CONTRACTOR: Omni Roofing Co.	8142 Molokai Way Fair Oaks, CA.	95628	965-8237
PROPERTY OWNER: Gordon + Lucy Estes	5625 Caleb Ave. SACTO., CA.	95819	
ARCH. ENGR.		LICENSE NO.	

NO. OF STORIES	NO. OF ROOMS	ROOF COVERING	AREA 1ST FLOOR	TOTAL AREA	GARAGE AREA	PATIO AREA	USE ZONE	STREET WIDTH
		Tile					R1	

THIS PERMIT IS FOR: ☒ BUILDING ○ MECHANICAL ○ PLUMBING ○ ELECTRICAL ○ SITE ○ FIRE

NATURE OF WORK IN DETAIL: T/O existing roof. Reshoot, install "lite" tile. 43 □.

FLOOD STATUS (Cost x) SPECIAL CONDITIONS ATTACHMENTS:

OCCUP. GROUP: R3

CONSTR. TYPE: VN

FIRE SP.:

FED CODE: 1A

PERMIT NO.: 97 1 1 6 8 9 R

CITY OF SACRAMENTO
BUILDING INSPECTION DIVISION
PERMIT SERVICES 264-7619

WORKER'S COMPENSATION DECLARATION

I hereby affirm under penalty of perjury one of the following declarations:

☐ I have and will maintain a certificate of consent to self-insure for workers' compensation as provided for by Section 3700 of the Labor Code, for the performance of work for which the permit is issued.

☒ I have and will maintain workers' compensation insurance, as required by Section 3700 of the Labor Code, for the performance of the work for which this permit is issued. My workers' compensation insurance carrier and policy number are:

Carrier State Fund

Policy Number 1461308 6-1-98

☐ (This section need not be completed if the permit is for one hundred dollars ($100) or less) I certify that in the performance of the work for which this permit is issued, I shall not employ any person in any manner so as to become subject to the workers' compensation laws of California and agree that if I should become subject to the workers' compensation provisions of Section 3700 of the Labor Code, I shall forthwith comply with those provisions.

Date: 8-16-97 Applicant: Norman A. Sells
(Signature)

WARNING: FAILURE TO SECURE WORKERS' COMPENSATION COVERAGE IS UNLAWFUL AND SHALL SUBJECT AN EMPLOYER TO CRIMINAL PENALTIES AND CIVIL FINES UP TO ONE HUNDRED THOUSAND DOLLARS ($100,000) IN addition TO THE COST OF COMPENSATION, DAMAGES AS PROVIDED FOR IN SECTION 3706 OF THE LABOR CODE, INTEREST AND ATTORNEY'S FEES.

VALUATION	$ 1999—
ISSUED BY:	
DATE ISSUED	8-18-97
BUILDING PERMIT FEE	$ 87—
PLAN CHECK/ PROC. FEE	$ 19—
S.M.I. FEE	$ .50
CONST. EXCISE TAX	$
CITY BUS LICENSE	$ .80
TECH. FEE	$ 4.32
WATER DEV. FEE	$
CITY SEWER DEV. FEE	$
REG. SEWER FEE	$
RESIDENTIAL CONST. TAX	$
TOTAL FEES	$ 113 62

THIS PERMIT SHALL EXPIRE BY LIMITATION IF WORK AUTHORIZED IS NOT COMMENCED WITHIN 180 DAYS.

DEPARTMENT OF
PLANNING AND DEVELOPMENT

CITY OF SACRAMENTO
CALIFORNIA

1231 I STREET
ROOM 200
SACRAMENTO, CA
95814-2998

Permit Services
916-264-7619
FAX 916-264-7046

TILE ROOF WORKSHEET

This worksheet must be filled out whenever any type of tile roof is applied for.

If the answer to question #5 is yes, a written engineering report from a registered engineer must be provided with each application.

1. BRAND AND MODEL OF TILE Pioneer Shake lite Tile
2. TILE WEIGHT PER SQUARE 7.2 lbs. per Ø ft.
3. WEIGHT OF ROOF SYSTEM PER SQUARE 810 a Ø
4. TOTAL WEIGHT OF ROOF SYSTEM 810 a Ø
5. DOES TOTAL WEIGHT OF ROOF SYSTEM EXCEED 750# PER SQUARE? YES NO
6. ROOF SLOPE 4/12

PLEASE A PROVIDE A SEPARATE WORKSHEET FOR EACH APPLICATION INVOLVING A TILE ROOF.

SCHOEN ENGINEERING
9524 BEDINGTON WAY
SACRAMENTO, CA 95827
(916) 369 6866
Lic. # C042913
August 8, 1997

EXP. 3/00

Jay Passo & Norm Sells
Omni Roofing
8142 Molokai Way
Fair Oaks, California 95628

SUBJECT: Reroof at 5625 Caleb Avenue, Sacramento, CA 95819

Dear Jay and Norm:

On August 8th, 1997 I observed the roof structure of the residence at the above mentioned address. The roof was made up 2x6 Douglas fir No. 2 rafters with a max span of 18' in the garage and 11' in the house. The garage door header was a 4x12 and spanned 15'-3". There was a breeze way and rear addition off of the breeze way that had a rafter span of 9'-7".

The following modification needs to be made prior to reroofing:

* In the garage the following rafters need to be doubled: In the Southeast hip the king rafter should be doubled with a 2x10 Douglas fir No. 2 or better; The 1st hip jack rafter down from the king rafter should be doubled with a 2x8 Douglas fir No. 2 or better; The 2nd hip jack rafter down from the king rafter should be doubled with a 2x6 Douglas fir No. 2 or better. Attach all reinforcing rafters to the existing rafters with 16d common nails @ 16" o.c..

* In the main house over the kitchen and family room the existing purlin is not adequate to support the new roof loads. In this area install a new purlin made up of 2-3/4"x14" Microlams laminated together with 2-rows of 16d common nails @ 12" o.c. from the fire wall between the kitchen and the garage to the family room wall. The new purlin should be installed just down slope from the existing purlin. The purlin should be supported off of each end wall with a 4x4 brace(see attached sketch for detail).

* The main ridge should be braced on either side of the chimney with doubled 2x4 braces off of the central load bearing wall. If the braces can not be installed directly under the ridge board they should be notched to provide direct bearing.

* Along the main wing of the house and the breeze way the rafters should be tied across the ridge with Simpson MSTA18 steel strap ties with 5-10d common nails into each rafter. Ties may be installed over existing sheathing.

* The ridge over the breeze way should be braced with doubled 2x4 ridge braces off of the bearing walls at each end of the breeze way The braces should slope in toward the middle of the breeze way at 45 degrees.

It is my finding that with the above mentioned modification this structure is adequate for the proposed reroof system which is comprised of: 1/2" plywood installed over the existing skip sheathing; 30 lb. tarred felt underlayment; Light weight concrete tile weighing 7.3 lbs./sq.ft..

NOTE: It is possible when reroofing that the increased load to structural elements also supporting wall, ceiling and floor finishes could cause some minor cosmetic cracking of these finishes. This is not untypical of a wood framed house and does not necessarily constitute structural inadequacy of these members.

This report deals with the structural adequacy of roof supporting members that were readily observable. It does not address any structure that was covered by wall finishes, buried in the ground or was otherwise not directly observable. These structures were assumed to be of standard construction as called for in the Uniform Building Code. Also, it does not address any existing deflection or warping of roof members. The repair of such deflections to improve architectural appearance, is at the option of the home owner and the roofing contractor.

I would like to thank you for allowing me to provide my services in this matter. Please let me know if I may be of further assistance.

Sincerely,

Mark S. Schoen P.E.

MSS:mss
C:\WP51\S-ENG97\ORF004.001

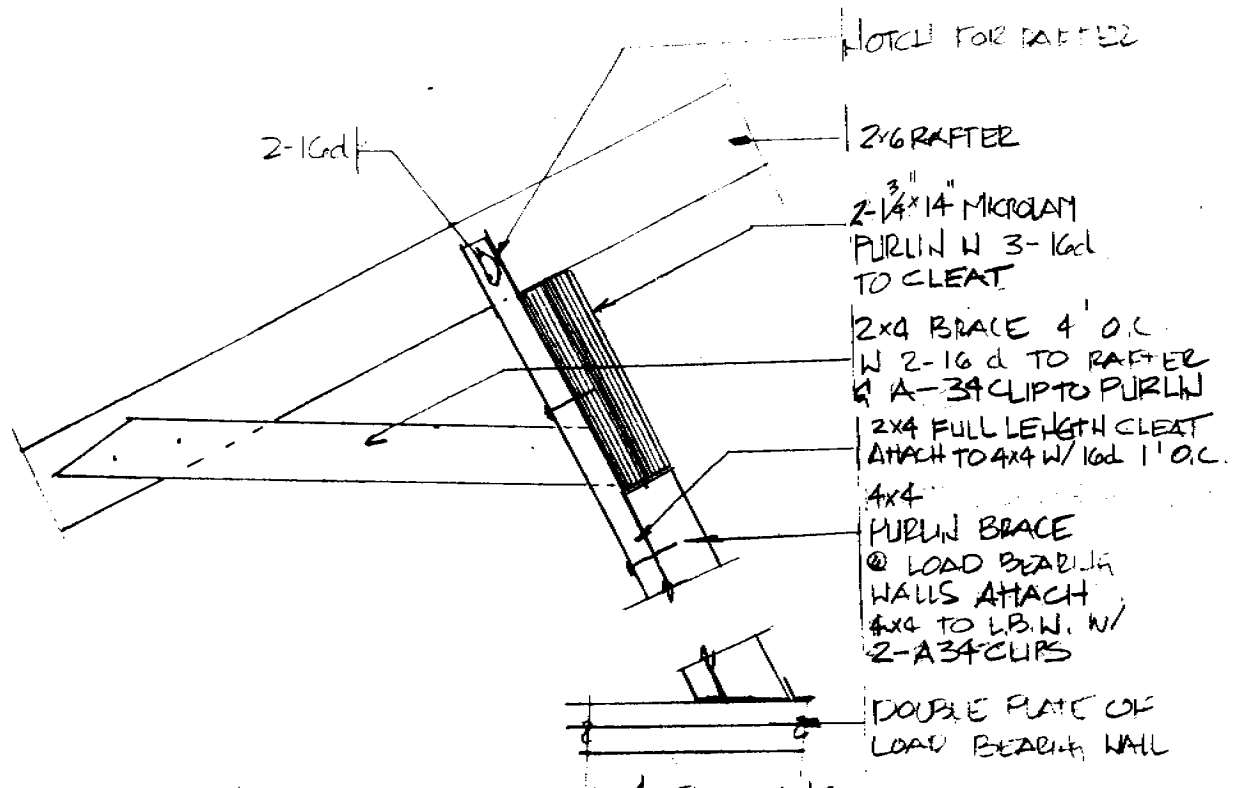

MICROLAM PURLIN & BRACING

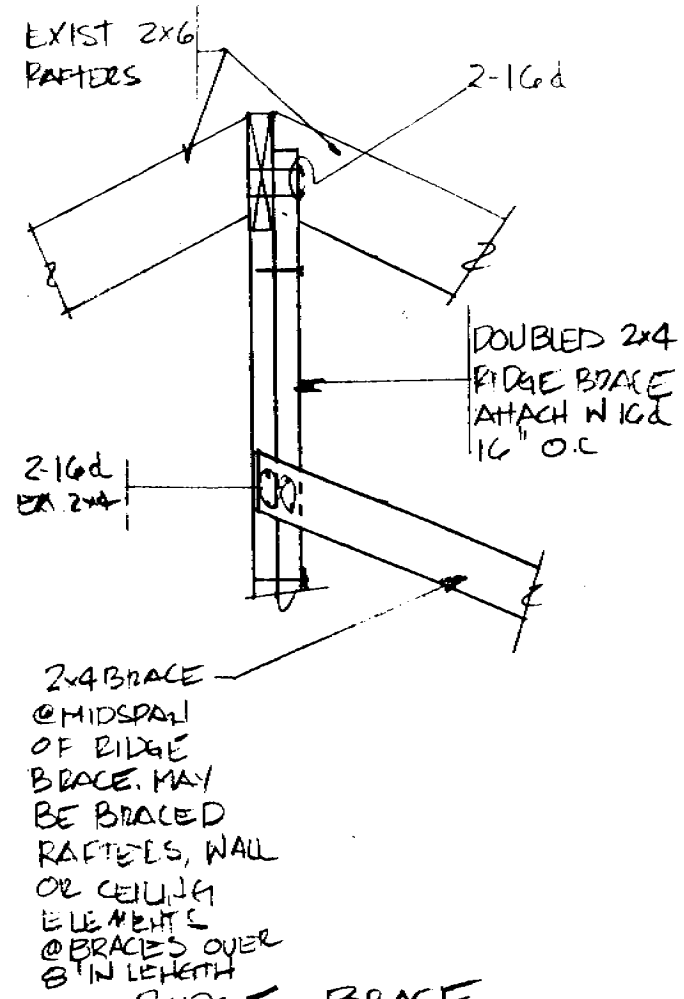

RIDGE BRACE

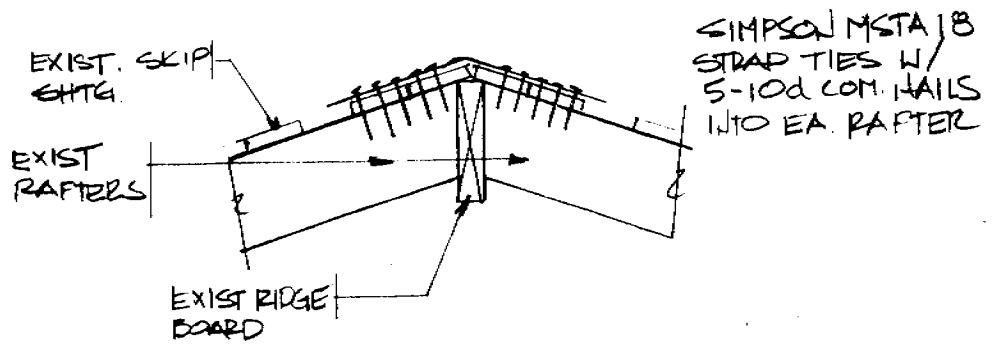

TIES @ RIDGE