OFFICE COPY

THIS IS A 2 PART FORM
WRITE ON A FIRM SURFACE

USE BLACK INK BALL POINT PEN — PRESS FIRMLY

SIGN PERMIT APPLICATION

SITE ADDRESS: 2333-39 NORTHGATE BLVD. SACTO, CA. 95833 | SUITE | INSP. AREA: 4

ASSESSOR PARCEL NO. 274-0110-046 | **PERMIT NO. 0315640**

NAME OF APPLICANT	ADDRESS	ZIP CODE	PHONE NO.
LICENSED CONTRACTOR SIGN UP CO.	4200 82ND ST #C SACTO, CA	95826	455-1300
BUSINESS OWNER LA FLOR PAPUSAS MEXICAN RESTAURANT	2333-39 NORTHGATE BLVD. SACTO, CA	95833	707-545-9898

CONSTRUCTION LENDING AGENCY

I hereby affirm under penalty of perjury that there is a construction lending agency for the performance of the work for which this permit is issued (Sec. 3097, Civ.C).

Lenders Name _____

Lenders Address _____

LICENSED CONTRACTORS DECLARATION

I hereby affirm under penalty of perjury that I am licensed under provisions of Chapter 9 (commencing with Section 7000) of Division 3 of the Business and Professions Code and my license is in full force and effect.

License Class C45 Lic. Number 555805

Date 9/30/03 Contractor Ronald L. Conner
(Signature)

OWNER - BUILDER DECLARATION

I hereby affirm under penalty of perjury that I am exempt from the Contractors License Law for the following reason (Sec. 7031.5, Business and Professions Code: Any city or county which requires a permit to construct, alter, improve, demolish, or repair any structure, prior to its issuance, also requires the applicant for such permit to file a signed statement that he or she is licensed pursuant to the provisions of the Contractors License Law (Chapter 9 (commencing with Section 7000) of Division 8 of the Business and Professions Code) or that he or she is exempt therefrom and the basis for the alleged exemption. Any violation of Section 7031.5 by any applicant for a permit subjects the applicant to a civil penalty of not more than five hundred dollars ($500.00):

☐ I, as owner of the property, or my employees with wages as their sole compensation, will do the work, and the structure is not intended or offered for sale (Sec. 7044, Business and Professions Code: The Contractors License Law does not apply to an owner of property who builds or improves thereon, and who does such work himself or herself or through his or her own employees, provided that such improvements are not intended or offered for sale. If, however, the building or improvement is sold within one year of completion, the owner-builder will have the burden of proving that he or she did not build or improve for the purpose of sale.)

☐ I, as owner of the property, am exclusively contracting with licensed contractors to construct the project (Sec. 7044, Business and Professions Code: The Contractors License Law does not apply to an owner of property who builds or improves thereon, and who contracts for such projects with a contractor(s) licensed pursuant to the Contractors License Law).

☐ I am exempt under Sec. _____ B & P C for this reason _____

Date _____ Owner _____
(Signature)

In issuing this building permit, the applicant represents, and the City relies on the representation of the applicant, that the applicant verified all measurements and locations shown on the application or accompanying drawings and that the improvement to be constructed does not violate any law or private agreement relating to permissible or prohibited locations for such improvements. This building permit does not authorize any illegal location of any improvement or the violation of any private agreement relating to location of improvements.

I certify that I have read this application and state that all information is correct. I agree to comply with all city and county ordinances and state laws relating to building construction and hereby authorize representative of this city to enter upon the abovementioned property for inspection purposes.

9/30/03 Brian O'Connor
Date Signature of Applicant or Agent

SIGN INFORMATION

☑ ATTACHED	☐ INTERIOR / ELECT.	☑ SINGLE FACED
☑ ILLUMINATED	☐ NON-ILLUMINATED	☐ BILLBOARD / SUBDIVISION
☑ INDIVIDUAL LETTERS	☐ PAINTED ON BUILDING	☑ LOGO
☐ METAL	☐ POLE	☐ DOUBLE FACED
☐ PLASTIC	☐ MONUMENT	☐ VINYL/GATOR FOAM
☐ WOODEN	☐ PROJECTING	☐ RE-FACE

SIGN COPY LOGO
MEXICAN RESTAURANT

S-22839

(A) HEIGHT 18" (B) LENGTH 21'
(A X B) SIGN AREA 38 [redacted]

POLE SIZE _____ FOOTING SIZE _____

STREET FRONTAGE (FT) _____

OCCUPANCY FRONTAGE (FT) _____

CITY OF SACRAMENTO
BUILDING INSPECTION DIVISION — PERMIT SERVICES 264-7619

WORKER'S COMPENSATION DECLARATION

I hereby affirm under penalty of perjury one of the following declarations:

PAID
OCT 08 2003

☐ I have and will maintain a certificate of consent to self-insure for workers' compensation as provided for by Section 3700 of the Labor Code, for the performance of work for which the permit is issued.

☒ I have and will maintain workers' compensation insurance, as required by Section 3700 of the Labor Code, for the performance of the work for which this permit is issued. My workers' compensation insurance carrier and policy number are:

Carrier STATE FUND

Policy Number 1670817-2003

☐ (This section need not be completed if the permit is for one hundred dollars ($100) or less) I certify that in the performance of the work for which this permit is issued, I shall not employ any person in any manner so as to become subject to the workers' compensation laws of California and agree that if I should become subject to the workers' compensation provisions of Section 3700 of the Labor Code, I shall forthwith comply with those provisions.

Date: 9/30/03 Applicant Ronald L. Conner
(Signature)

WARNING: FAILURE TO SECURE WORKERS' COMPENSATION COVERAGE IS UNLAWFUL AND SHALL SUBJECT AN EMPLOYER TO CRIMINAL PENALTIES AND CIVIL FINES UP TO ONE HUNDRED THOUSAND DOLLARS ($100,000) IN ADDITION TO THE COST OF COMPENSATION, DAMAGES AS PROVIDED FOR IN SECTION 3706 OF THE LABOR CODE, INTEREST AND ATTORNEY'S FEES.

OFFICE USE ONLY

ENGINEERING REQUIRED? YES NO APPROVED BY _____

DESIGN REVIEW REQUIRED? YES NO APPROVED BY _____

SPECIAL PERMIT REQUIRED? YES NO P# _____

VARIANCE REQUIRED? YES NO P# _____

LOCATED IN PUD? YES NO WHICH PUD? _____

SIGN VALUATION

A. TYPE OF SIGN channel ltrs

B. $ _____ PER SQ. FT. X _____ SQ. FT. = $ _____

APPROVED BY MJ DATE 10/8/03

DENIED BY _____ DATE _____

FINAL INSPECTIONS

BUILDING INSPECTOR D Pierson DATE 4/16/04

ELECTRICAL INSPECTOR _____ DATE _____

SIGN INSPECTOR _____ DATE _____

FEES:	RECEIVED DATE	RECEIVED AMOUNT
SIGN APPLICATION FEE		
SIGN PERMIT FEE		
ELECTRICAL SIGN FEE		
CITY BUSINESS LICENSE		
OTHER		

TOTAL FEES $

THIS PERMIT SHALL EXPIRE BY LIMITATION IF WORK AUTHORIZED IS NOT COMMENCED WITHIN 180 DAYS.

LA FLOR PAPUSAS MEXICAN RESTAURANT

2 333-39 NORTHGATE BLVD.
SACTO, CA.
5833

sign up
4200 82nd AVE. STE. C
SACRAMENTO, CA 95826
(916) 455-1300 FAX 455-1326

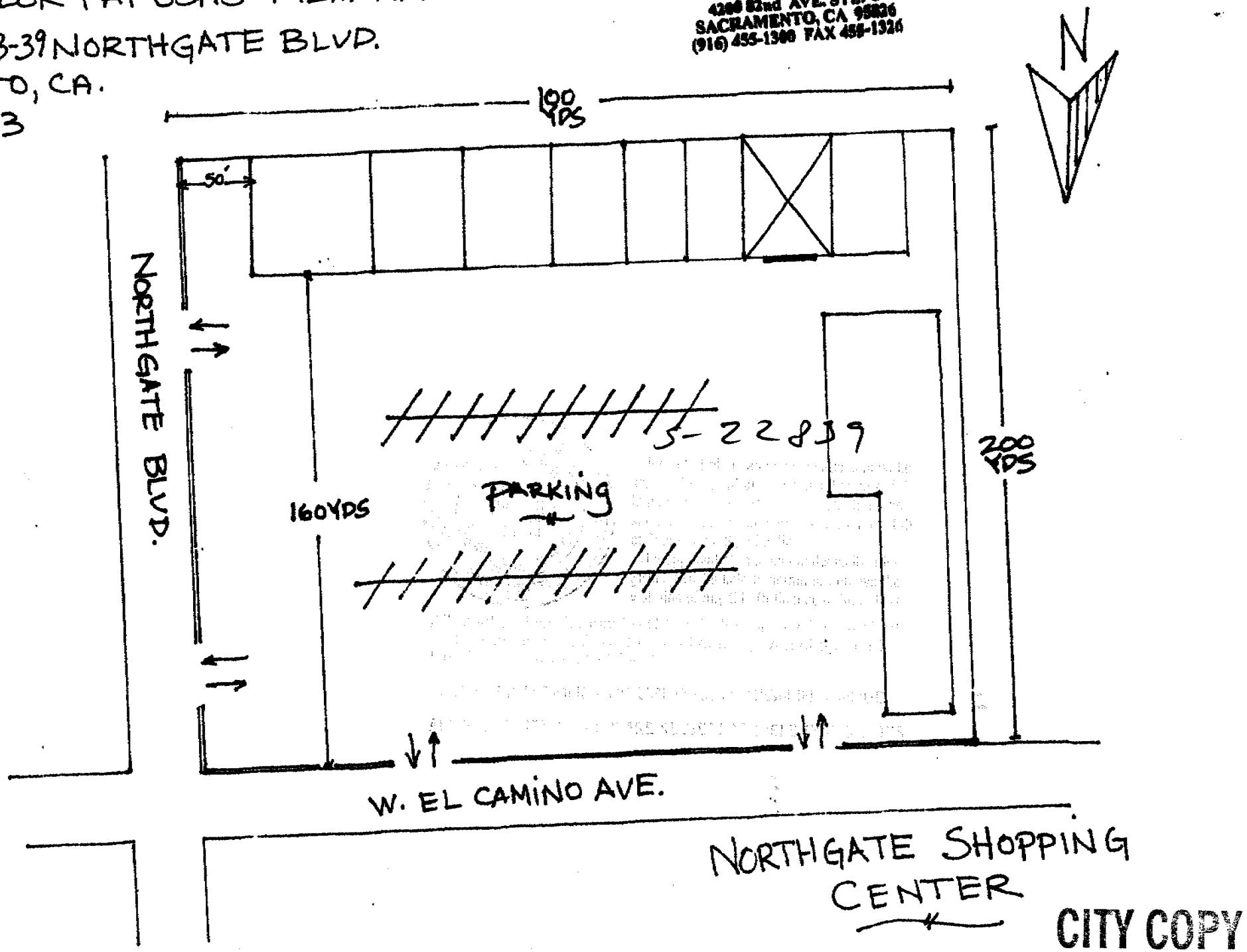

CITY COPY

NAME: NORTHGATE PLAZA / LA FLOR PUPUSA MEXICAN RESTAURANT

[redacted] 2333-39 NORTHGATE BLVD. SACTO, CA. 95833

9-30-03

Sign-Up Graphics

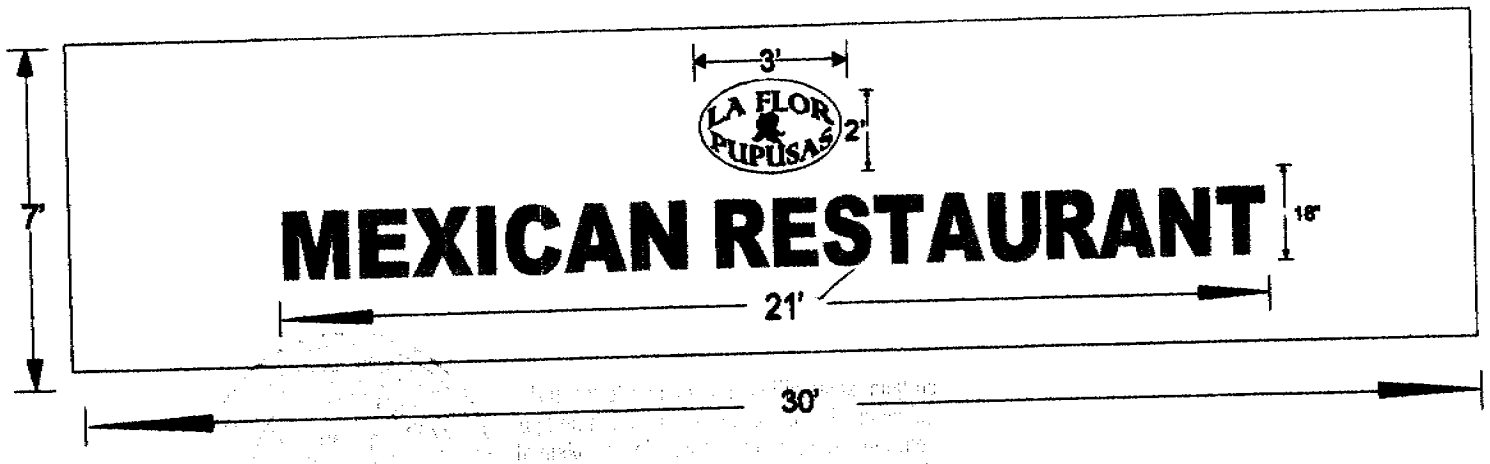

CITY COPY

SIZE: 18" / 2'x3'

FACE: TRANS. LT GREEN

RETURNS: DURANOTIC BRONZE

TRIM: GOLD

[X] CHANNEL LETTERS

ATTENTION: ALL ARTWORK, LAYOUTS AND DESIGN CONCEPTS ARE PROPERTY OF SIGN UP CO. UNAUTHORIZED DUPLICATION OR MANUFACTURING FROM DESIGN PROOF IS UNLAWFUL. PLEASE CONTACT SIGN UP CO. FOR ANY QUESTIONS REGARDING THIS MATTER.

APPROVED BY: _____

LA FLOR PAPUSAS MEXICAN RESTAURANT
2333-39 NORTHGATE BLVD.
SACTO, CALIF. 95833

sign-UP graphics
4200 52nd AVE. STE. C
SACRAMENTO, CA 95826
(916) 455-1300 FAX 455-1326

STUCCO FACIA

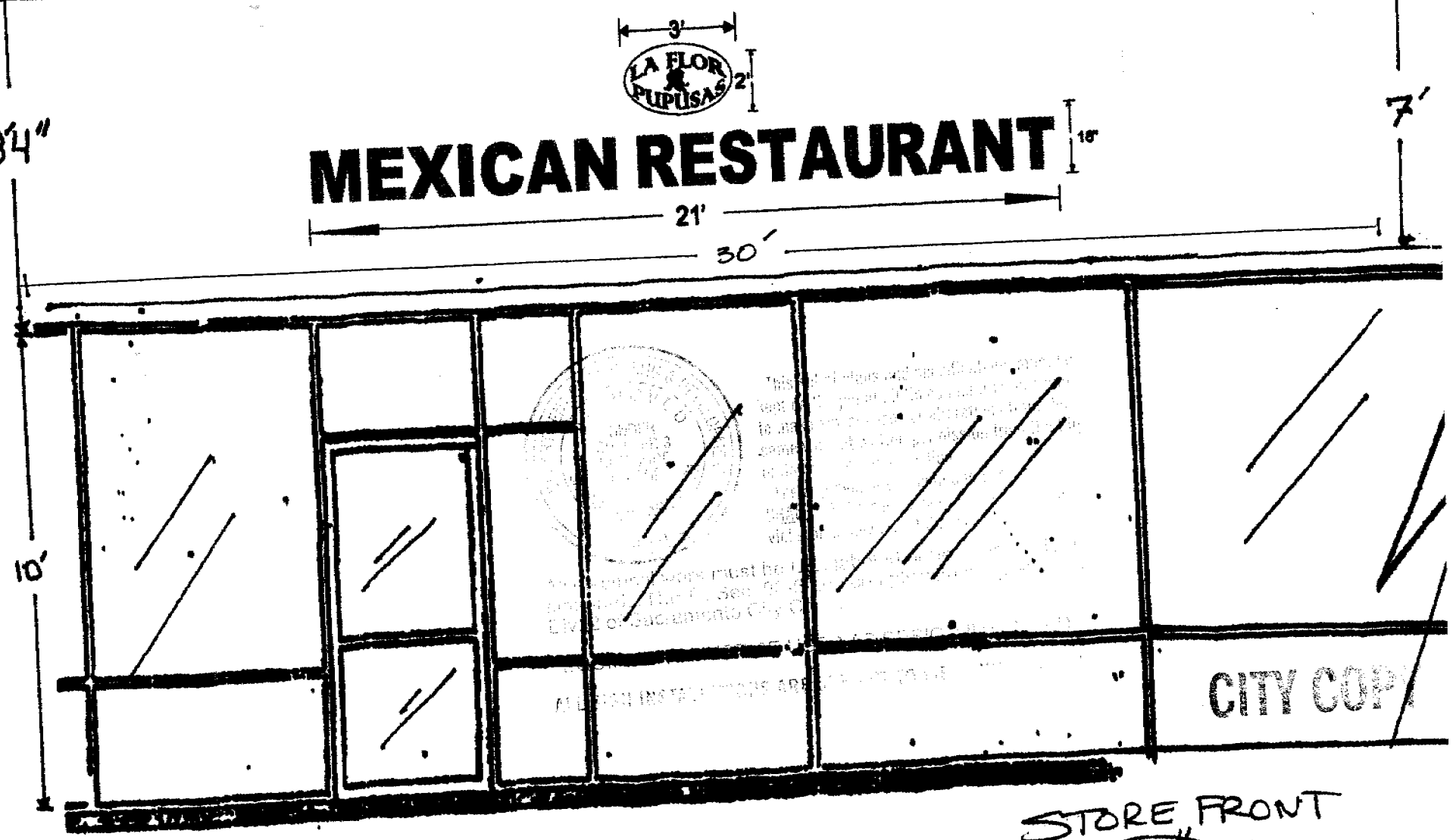

sign up Quality
4200 82nd AVE. STE. C
SACRAMENTO, CA 95826
(916) 455-1300 FAX 455-1326

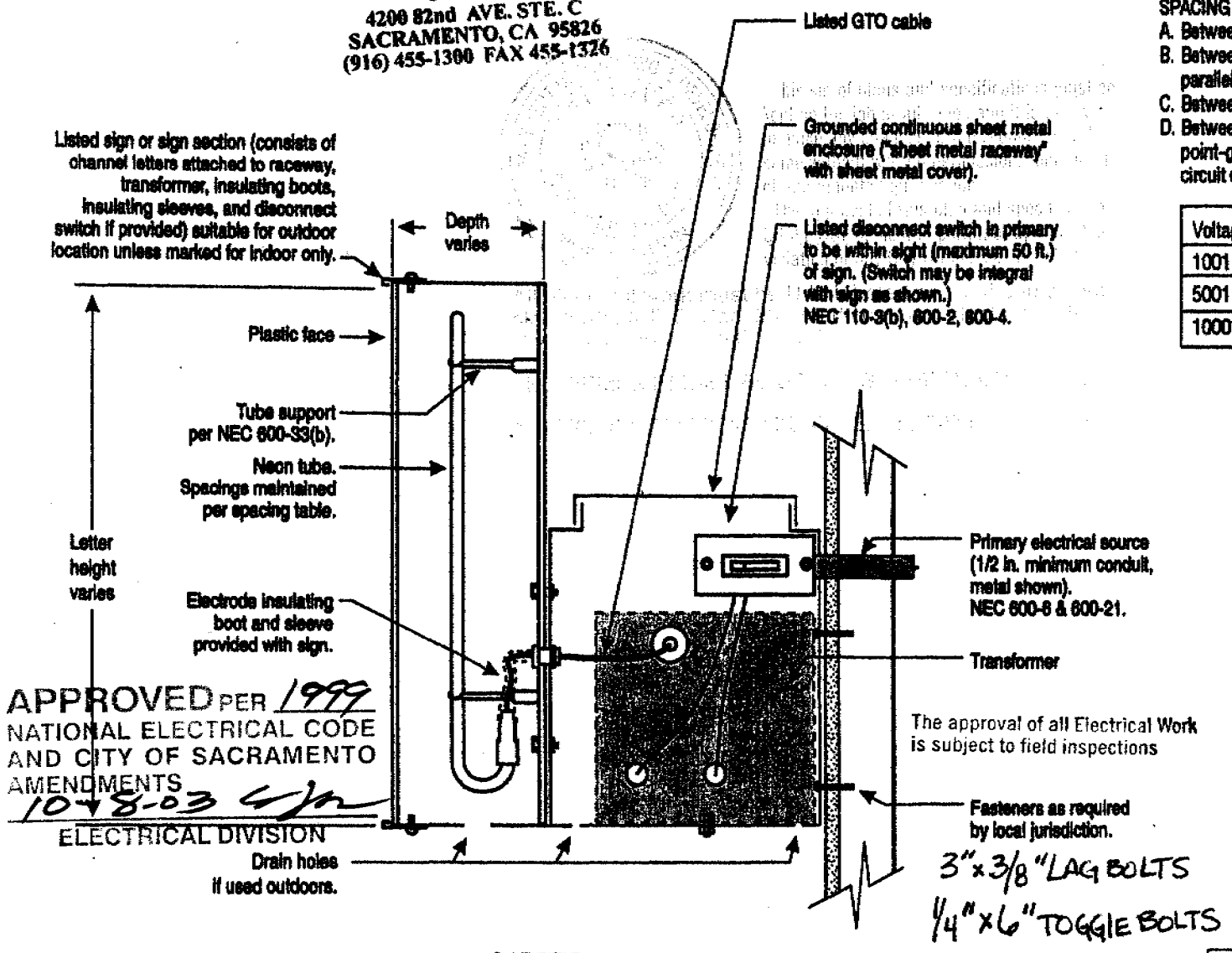

APPROVED PER 1999
NATIONAL ELECTRICAL CODE
AND CITY OF SACRAMENTO
AMENDMENTS
10-8-03
ELECTRICAL DIVISION

The approval of all Electrical Work is subject to field inspections

3"x3/8" LAG BOLTS
1/4"x6" TOGGLE BOLTS

SPACING TABLE

A. Between primary wiring and insulated high voltage wiring.
B. Between insulated high voltage wiring and dead metal where wi parallels dead metal for more than 1" within sign sections.
C. Between neon tube (if over 7500 volt circuit) and nearest surfac
D. Between uninsulated high voltage conductors or components. (point-grounded transformer) and dead metal (ground), low volt circuit conductors and high voltage conductors of opposite pola

Voltage	A	B	C	D
1001 to 5000	1/2 inch	1/2 inch	none	3/4 i
5001 to 10000	3/4 inch	3/4 inch	1/4 inch if	1-1/8
10001 to 15000	1 inch	1 inch	7500V+	1-1/2

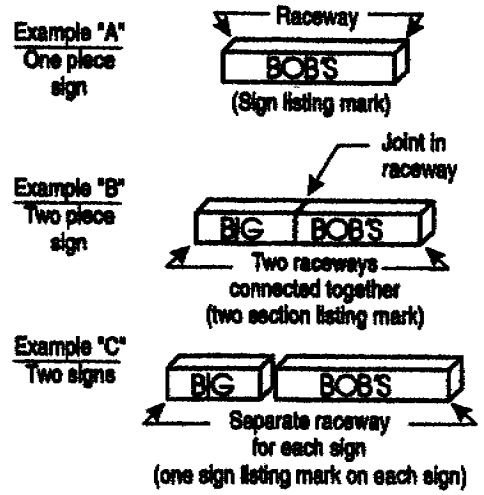

Installation of signs listed per UL48
Note: Installation requirements only.
Manufacturing requirements contained in UL48.

sting marks:
Sign or section listing mark.
Required on sign or sections.
See examples A, B, & C.
The first blank space identifies the number of each sign section. The second blank space indicates the total number of sign sections.

LISTED
by qualified electrical testing laboratory
ELECTRIC SIGN SECTION
NO. XX-123456
[ ] of [ ]

All rights reserved. No part of this work covered by the copyright hereon may be reproduced or used in any form or by any means - graphic, electronic, or mechanical, including photocopying, recording, taping, or information storage and retrieval systems - without written permission of the publisher, except that single copies of individual pages may be made by a bona fide electrical sign installation firm for the sole purpose of providing guidance on the installation of electrical signs or outline lighting, without the permission of the publisher.

ILLUMINATED CHANNEL LETTER
CONTINUOUS RACEWAY
INSULATING BOOTS AND SLEEVE

	Date: October 1994
Scale None	IAEI Dwg. No. **UL48-T3B**

CITY COPY