NOTE: DO NOT COVER OR CONCEAL ANY BUILDING, ELECTRICAL PLUMBING OR MECHANICAL WORK WITHOUT INSPECTOR'S SIGNATURE IN PROPER PLACE.

	INSPECTION	INSPECTOR	DATE
B10	FOUNDATION FORMS		
50/B11	UFER GROUND		
B12	CONCRETE SLAB FORMS		
P40	PLUMB. UNDERFLOOR/SLAB		
M30	MECH/UNDERFLOOR/SLAB		
E61	ELECT. UNDERGROUND		
E62	ELECT. CONDUIT-SLAB		
	DO NOT COVER UNTIL INSTALLATION ABOVE HAS BEEN SIGNED		
B13	FLOOR JOISTS OR GIRDERS		
	DO NOT INSTALL SUB FLOOR UNTIL ABOVE HAS BEEN SIGNED		
B14/15	INSULATION/WALL/FLOOR		
P41	TOP PLUMBING		
M31	TOP MECHANICAL/WALL/CEIL.		
E63	ROUGH ELECTRICAL/WALL/CEIL.		
B19	FRAME		
B17	ROOF PLYWOOD NAIL. COMM. & APTS.		
B18	EXTERIOR LATH/SIDING		
	DO NOT COVER UNTIL INSTALLATION ABOVE HAS BEEN SIGNED		
B22	INT. LATH OR WALL BD. NAILING		
	DO NOT TAPE PLASTER OR TOP UNTIL ABOVE HAS BEEN SIGNED		
E66	SERVICE UNDERGRD CONDUIT		
P43	SEWER SERVICE		
P42	WATER SERVICE		
P46	SPRINKLER SYSTEM		
	DO NOT COVER UNTIL INSTALLATION ABOVE HAS BEEN SIGNED		
P47/M33	GAS TEST		
P48	TEMP GAS ISSUED	EXPIRES	
E68	POWER POLE		
E67	TEMP. POWER #		
	SWIMMING POOLS ONLY		
P47	GAS TEST		
P51	PLUMBING PRE-GUNITE		
P52	PLUMBING PRE-DECK		
E70	ELECTRICAL PRE-GUNITE		
E71	ELECTRICAL PRE-DECK		
E72	ELECTRICAL UNDERGRD		
	DO NOT COVER UNTIL INSTALLATION ABOVE HAS BEEN SIGNED		

ENERGY COMPLIANCE CERTIFICATE TO BE ON FILE PRIOR TO FINAL APPROVAL.

FINAL APPROVALS

		FINAL INSP. NO	DATE	SIGNED
B29	BUILDING	CANCEL	01/04/2000	
E79	ELECTRICAL	closed		
P59	PLUMBING			
M39	MECHANICAL			

DO NOT OCCUPY BUILDING UNTIL ALL OF THE ABOVE HAVE BEEN SIGNED AND CERTIFICATE OF OCCUPANCY ISSUED

THIS CARD TO BE POSTED ON JOB AT ALL TIMES UNTIL FINAL APPROVAL

BUILDING SITE ADDRESS: 2764 Oakmont St | SUITE: | INSP. AREA: Ary

ASSESSOR PARCEL NO.: 263-0142-032 | COMMUNITY PLAN NO.: | PLAN CHECK NO.:

NAME OF APPLICANT	ADDRESS	ZIP CODE	PHONE NO.
LICENSED CONTRACTOR			
PROPERTY OWNER: IRENE WINTER			568-0146
ARCH. ENGR.			
		LICENSE NO.	

NO. OF STORIES	NO. OF ROOMS	ROOF COVERING	AREA 1ST FLOOR	TOTAL AREA	GARAGE AREA	PATIO AREA	USE ZONE	STREET WIDTH
							RC1	

THIS PERMIT IS FOR: (X) BUILDING (X) MECHANICAL (X) PLUMBING (X) ELECTRICAL ( ) SEWER DISCONNECT

NATURE OF WORK IN DETAIL: Remodel DWELLING + 2200 SQ FT Addition AKA 2764 OAKMONT

WRECKING NO. | CASE NO. 2764 OAKMONT

DESIGN REVIEW REQUIRED [X] YES [ ] NO

WORK TO BE COMPLETED IN ____/60 DAYS AS PER BUILDING CODE 9.01.054

OCCUP. GROUP: R3

CONSTR. TYPE: VN

FIRE SP.:

FED CODE: 1A

PERMIT NO: 971125 02 H

VALUATION $ 29,000

ISSUED BY:

DATE ISSUED

BUILDING PERMIT FEE	$	419.00
PLAN CHECK/ PROC. FEE	$	50.00
S.M.I. FEE	$	1.10
CONST. EXCISE TAX	$	174
CITY BUS. LICENSE	$	
TECH FEE	$	17.52
WATER DEV. FEE	$	
CITY SEWER DEV. FEE	$	
REG. SEWER FEE	$	
RESIDENTIAL CONST. TAX	$	
HOUSING FEE	$	78.00
TOTAL FEES	$	5[illegible]

CITY OF SACRAMENTO
HOUSING & DANGEROUS BUILDINGS DIVISION
INSPECTIONS 264-5404 OR 264-5850

WORKER'S COMPENSATION DECLARATION

I hereby affirm under penalty of perjury one of the following declarations:

[ ] I have and will maintain a certificate of consent to self-insure for workers' compensation as provided for by Section 3700 of the Labor Code for the performance of work for which the permit is issued.

[ ] I have and will maintain workers' compensation insurance, as required by Section 3700 of the Labor Code, for the performance of the work for which this permit is issued. My workers' compensation insurance carrier and policy number are:

Carrier _____

Policy Number _____

[ ] (This section need not be completed if the permit is for one hundred dollars ($100) or less) I certify that in the performance of the work for which this permit is issued, I shall not employ any person in any manner so as to become subject to the workers' compensation laws of California and agree that if I should become subject to the workers' compensation provisions of Section 3700 of the Labor Code, I shall forthwith comply with those provisions.

Date _____ Applicant _____
(Signature)

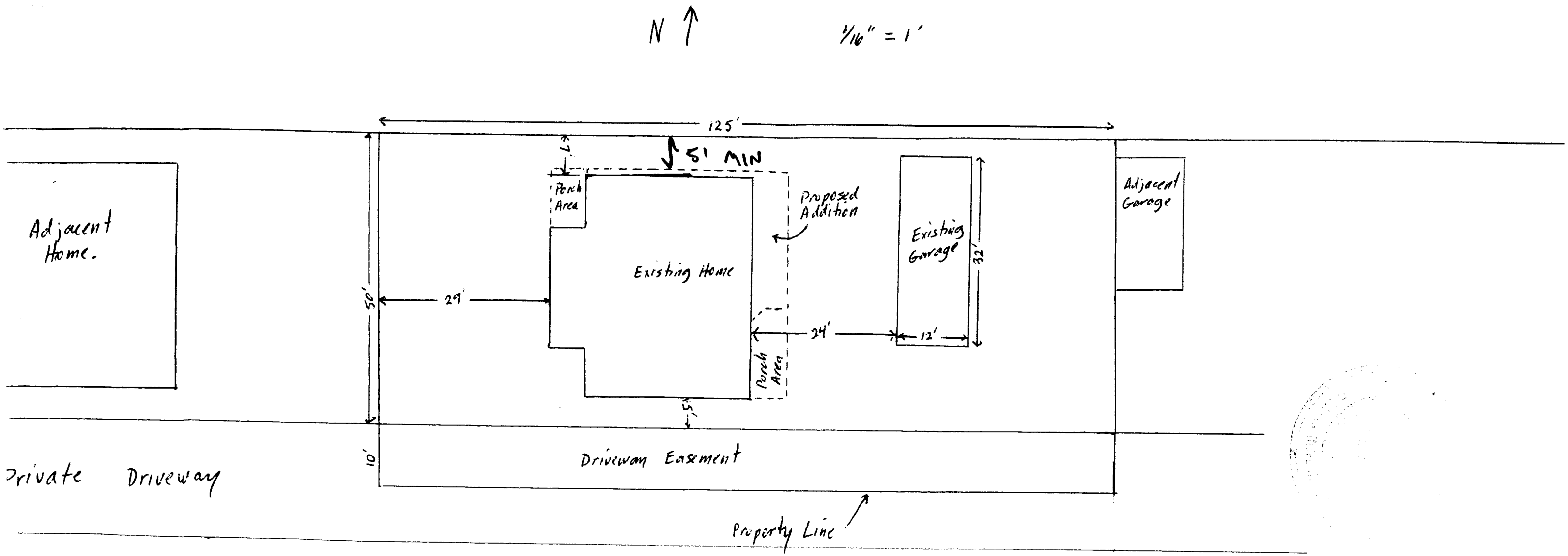

The approval of all Plumbing Mechanical and Electrical work is subject to field inspection

ceiling light

outlet plug

Addition to home is indicated by dash lines

Kitchen has added 6', + 1' added to back wall.

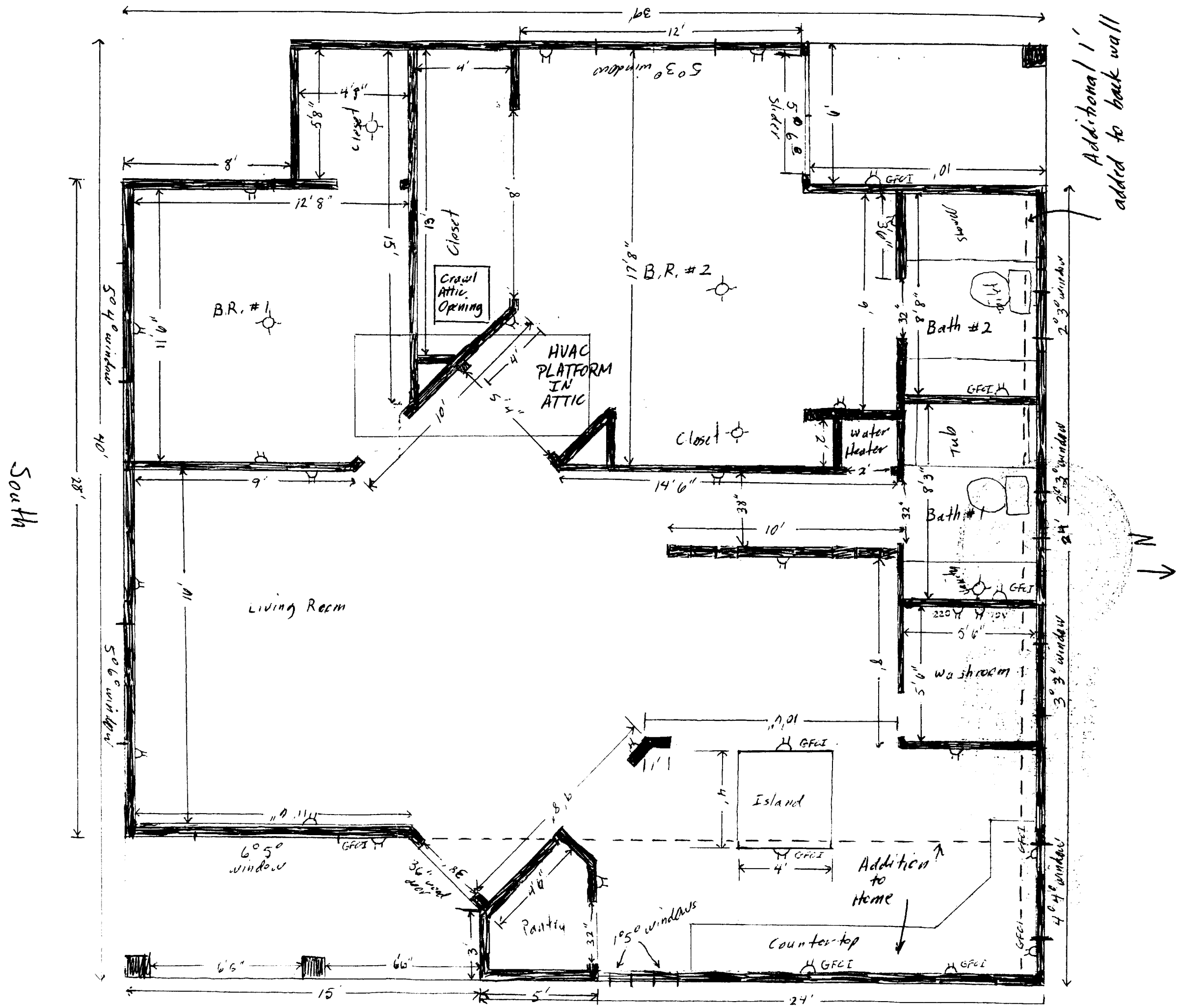

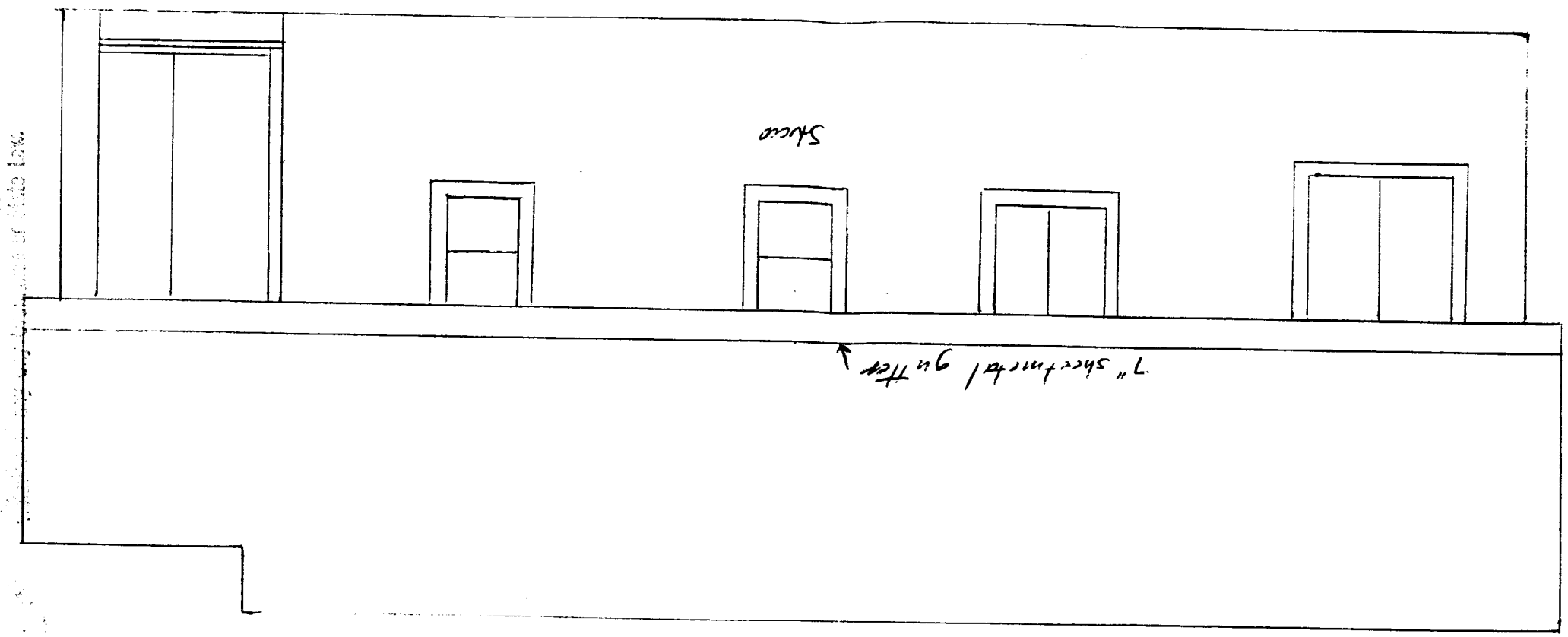
7" sheetmetal gutters
Stucco

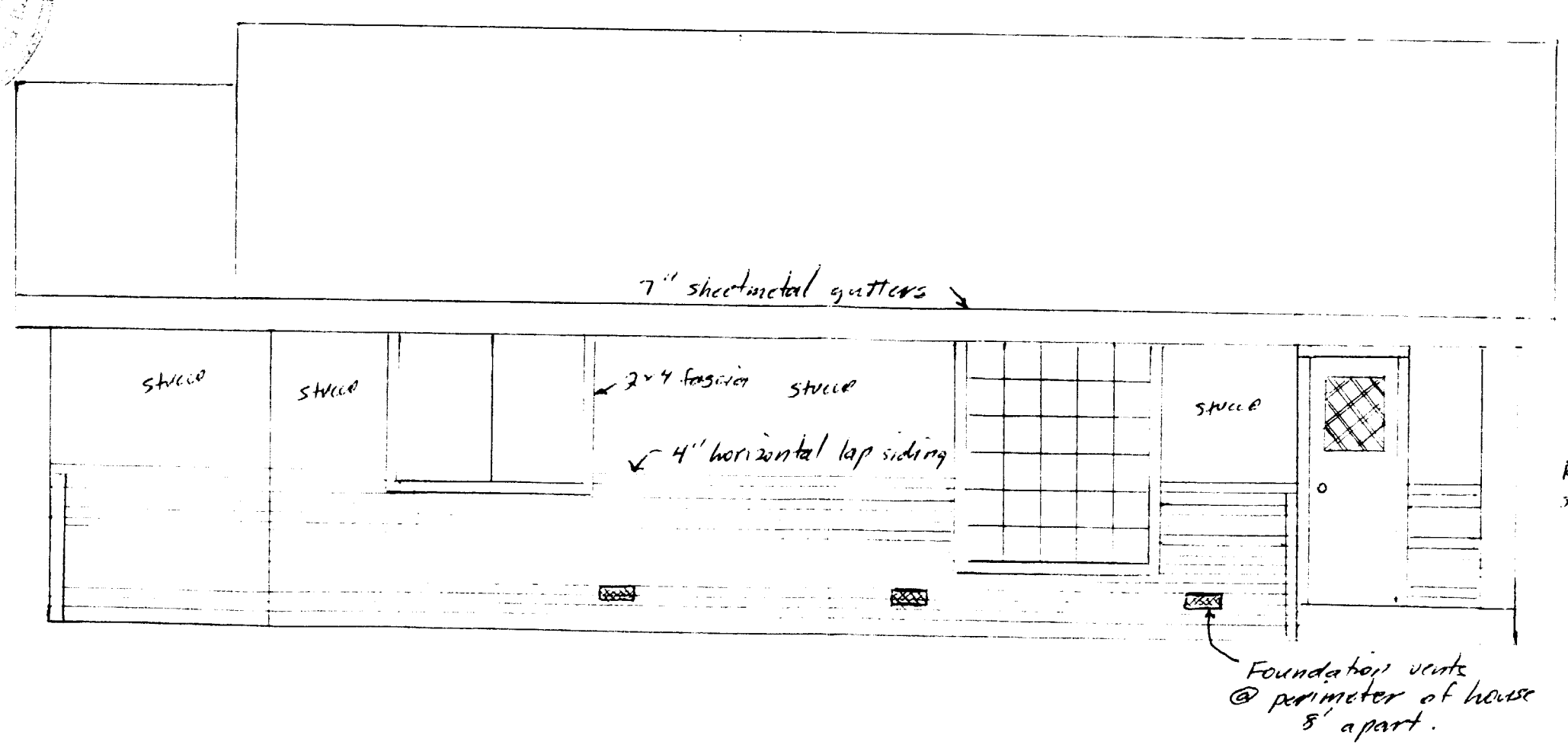
7" sheetmetal gutters
stucco
stucco
2×4 fascia
stucco
4" horizontal lap siding
stucco
Recessed panel
solid core front door
Foundation vents
@ perimeter of house
8' apart.

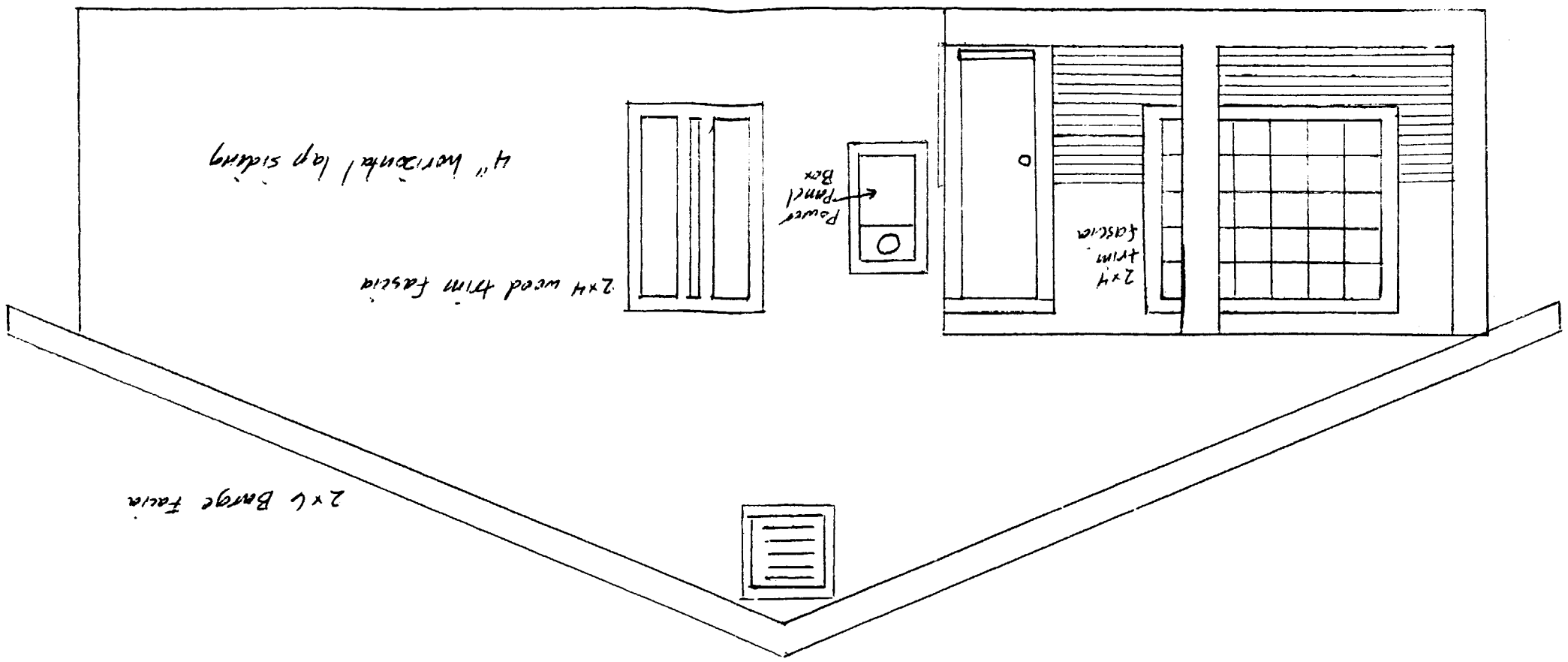
Stucco
Stucco
Stucco
2x6 Barge Fascia

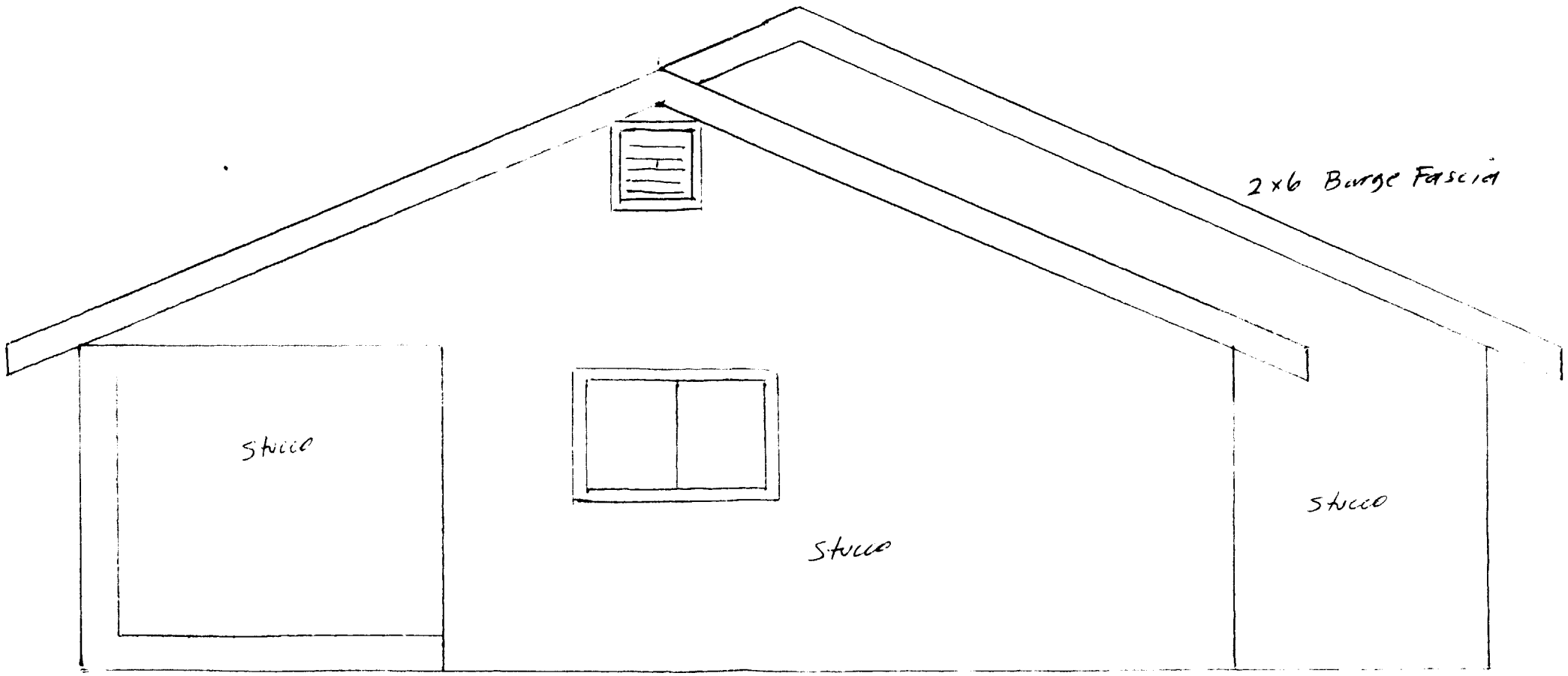
2x6 Barge Facia
2x4 trim fascia
2x4 wood trim fascia
Power Panel Box
4" horizontal lap siding

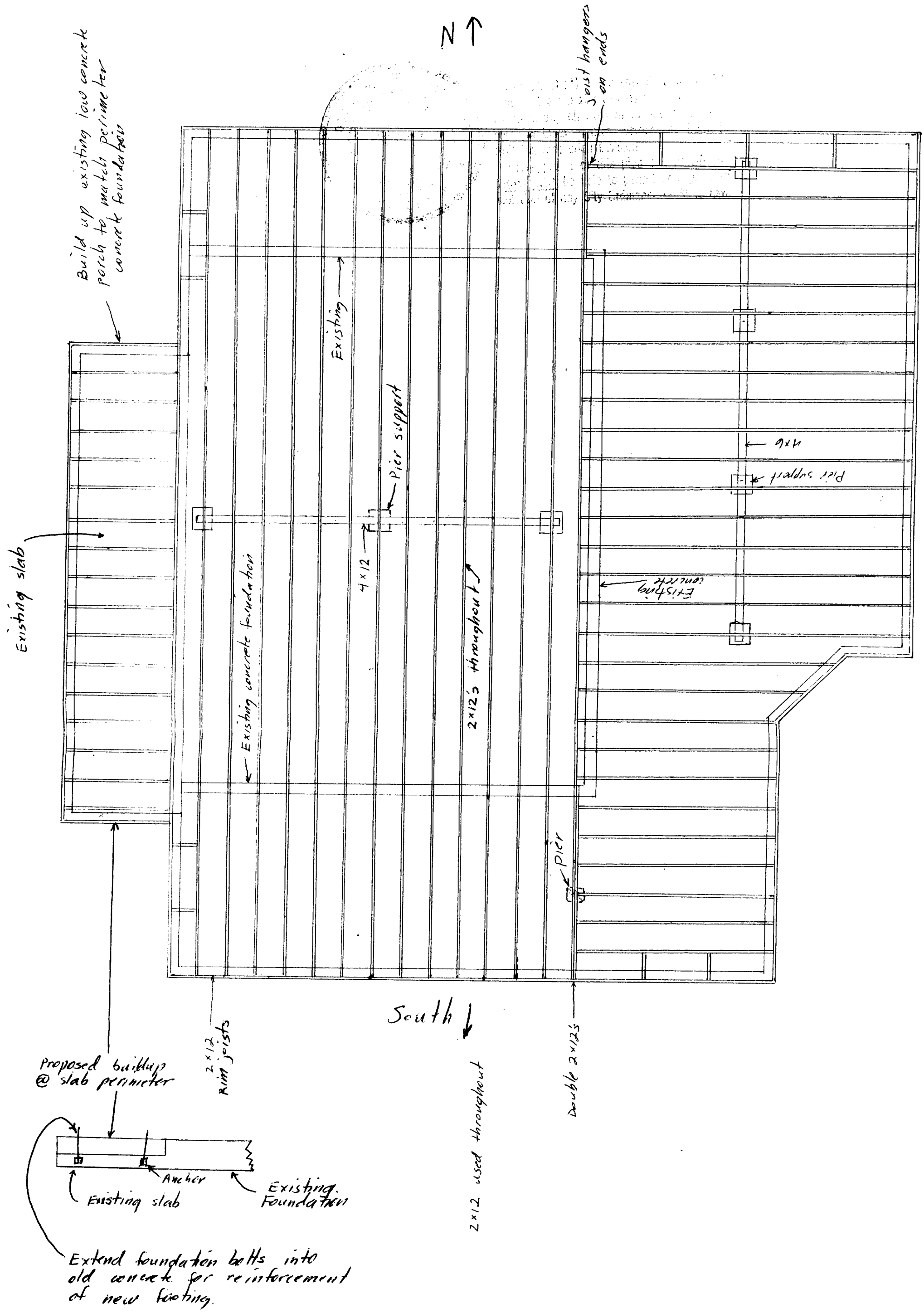
N
Joist hangers on ends
Build up existing low concrete porch to match perimeter concrete foundation
Existing
Pier support
Existing slab
4×12
Existing concrete foundation
2×12's throughout
Existing concrete
4×6
Pier support
Pier
South
2×12 Rim joists
2×12 used throughout
Double 2×12's
Proposed buildup @ slab perimeter
Anchor
Existing slab
Existing Foundation
Extend foundation bolts into old concrete for reinforcement of new footing.

North

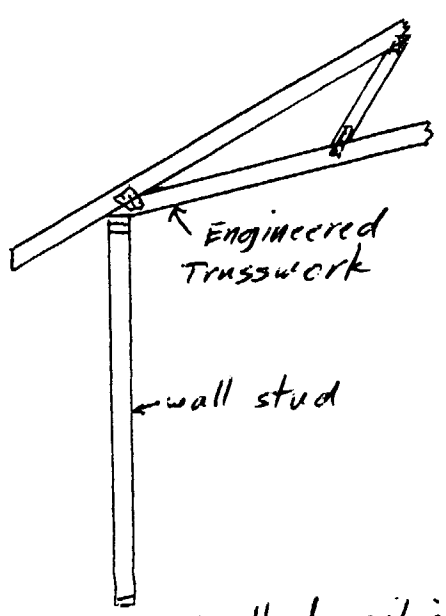

vaulted ceiling
in living/dining
area only.

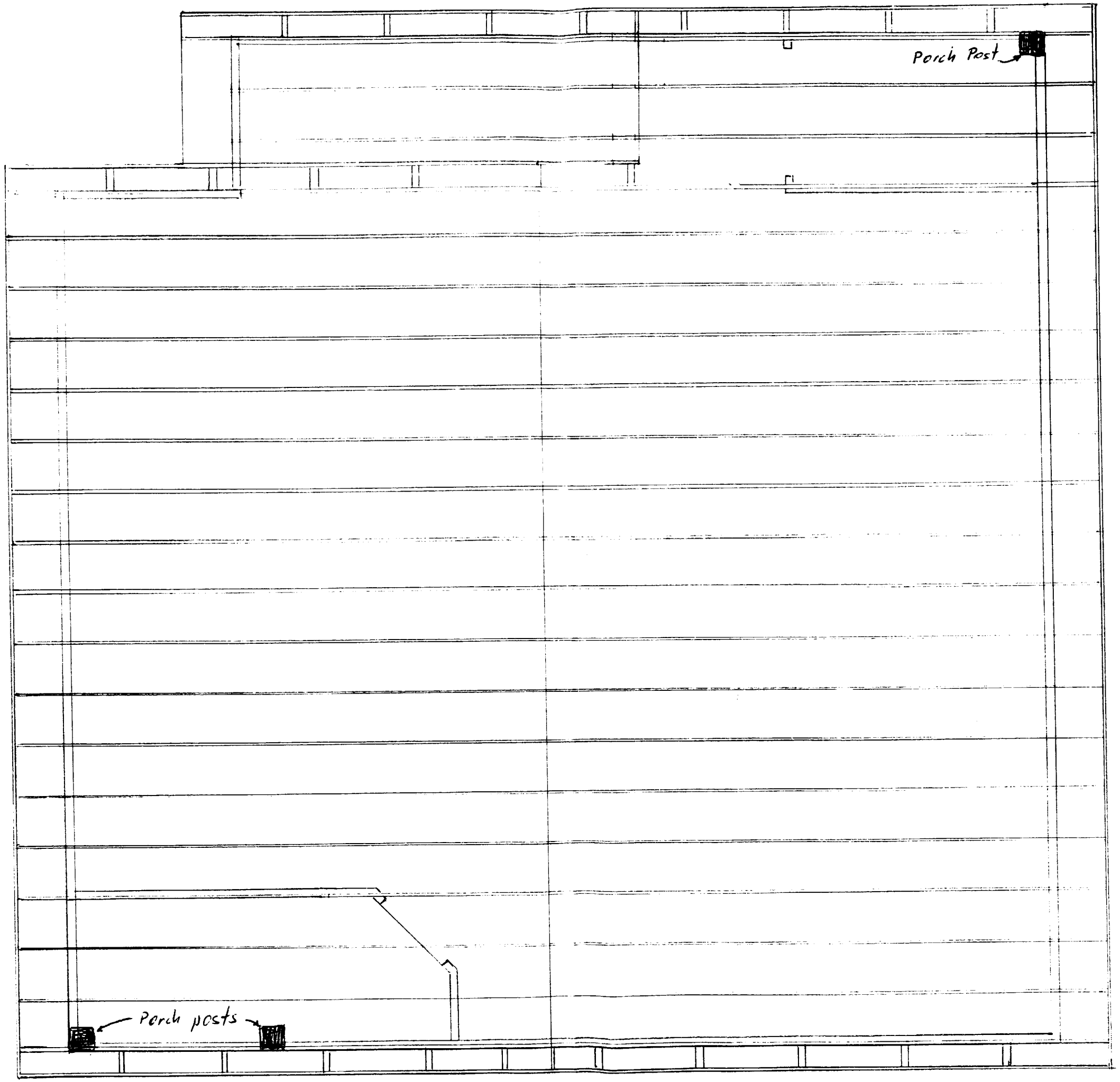

Structural Details

All building methods used will conform with standard building practice and will include appropriate fasteners, bracing and quality of materials to accomplish this task.

1. Foundation footing

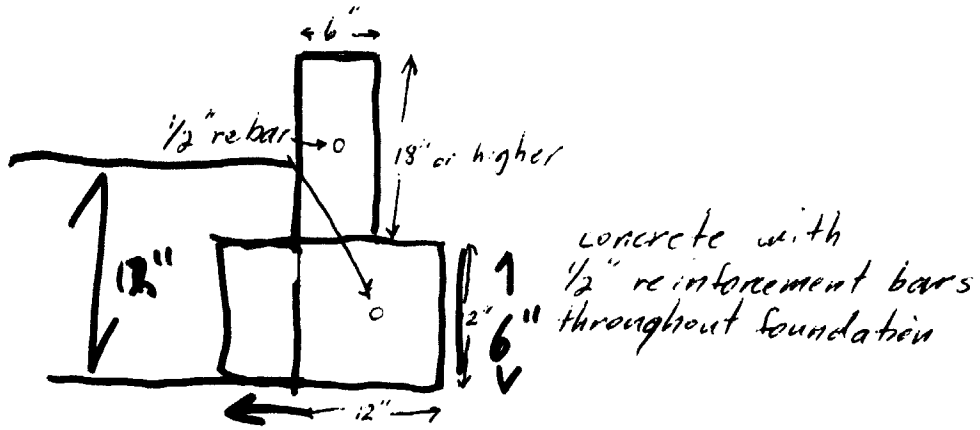

2. Floor + joistwork

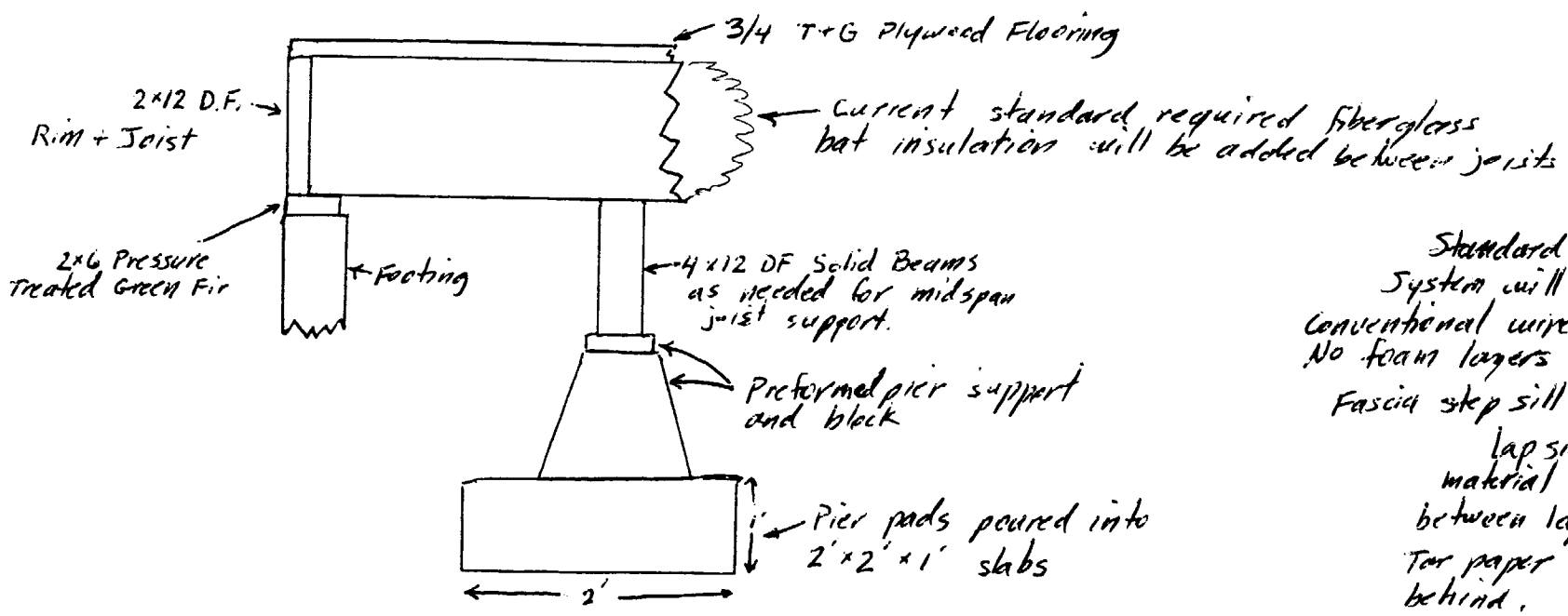

At least 18" clearance will be provided under joistwork for proper crawlspace + ventilation.

3. Outside corner wall construction typical of that used throughout

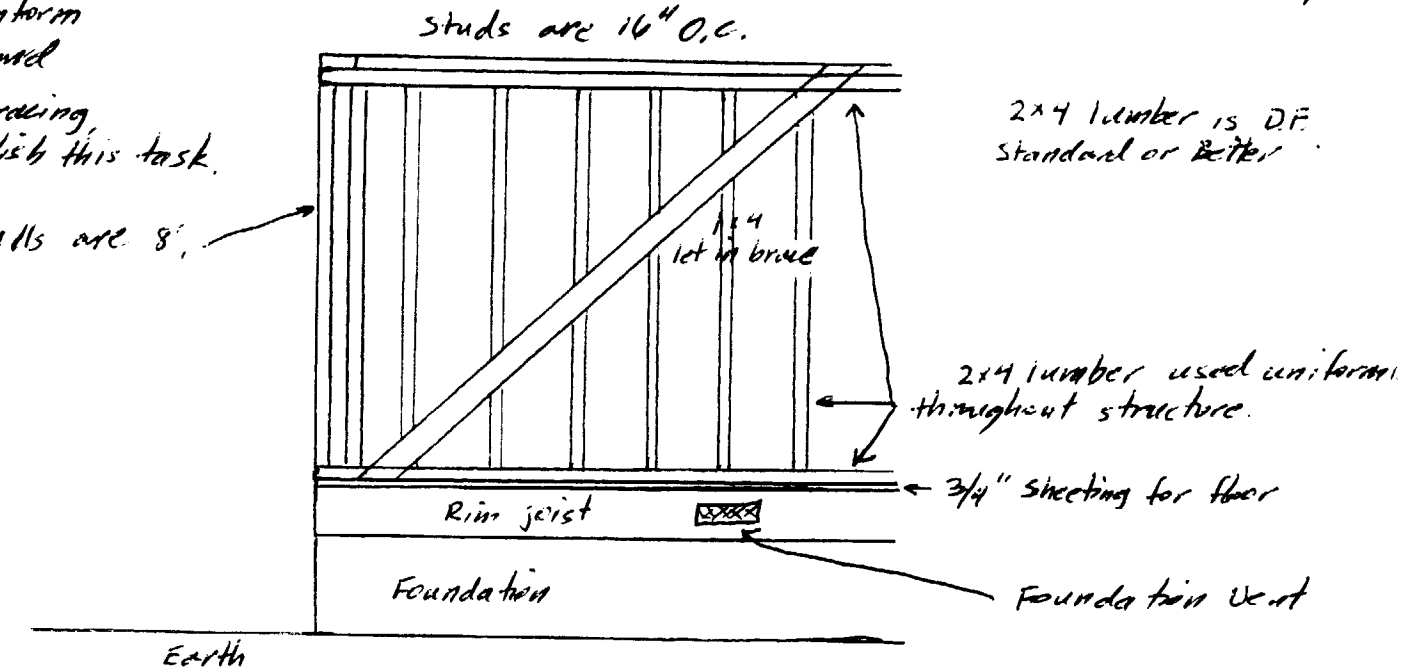

4. Finished outside wall as used all @ house.

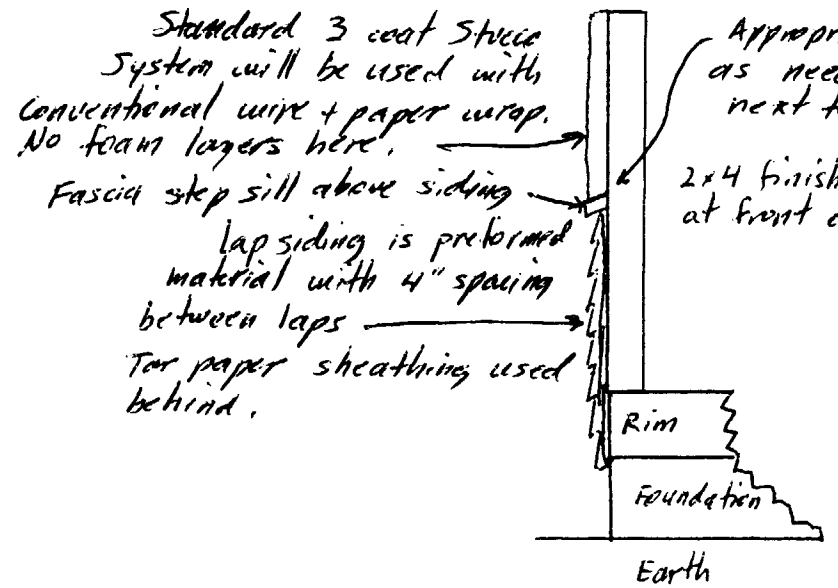

5. Trusswork cutaway has been shown on roof plan.